CHAPTER 52

DOORS

TABLE OF CONTENTS

Subject	Subject No.
DOORS	52-00
Door Location Diagram	52-00-1
Allowable Damage	52-00-2
Figure 1 - Allowable Damage to Doors	
Figure 2 - Damage Limits for Pressurized Door Exterior Skin Panels	
Figure 3 - Nose Landing Gear Door Allowable Damage (Graphite Composite NLG Door)	
Figure 4 - Main Landing Gear Door Allowable Damage (Graphite Composite MLG Door)	
Figure 5 - Crew Door Structure Allowable Damage	
Figure 6 - Passenger/Crew Entry Door Skin Allowable Damage	
Figure 7 - Passenger/Crew Entry Door Structure Allowable Damage	
Structure Repair	52-00-3
Service Bulletin Repair Chart	
Figure 1 - Typical Small Hole Flush Repair on Aluminum Door Skin of 0.040 Gage or Thicker	
Figure 2 - Door Skin - Flush Repair Between Beams	
Figure 3 - Door Skin - Flush Repair of Damage Across a Beam	
Figure 5 - Door Skin - Typical External Repair for Damage at a Beam	
Figure 6 - Door Skin - Typical External Repair for Damage Between Beams	
Figure 7 - Typical Small Hole External Repair on Aluminum Door Skin	
Figure 8 - Passenger/Crew Entry and Galley Door - Upper and Lower Lug Repair	
Figure 9 - Passenger/Crew Entry and Galley Door - Aft Upper Gate Lug Repair	
PASSENGER DOORS AND AFT AIRSTAIR	52-10
Structure Identification	52-10-1
Figure 1 - Forward Entry Door	
Figure 2 - Aft Entry Door	
Figure 3 - Aft Airstair	
Structure Repair	52-10-2
Figure 1 - Deleted	
Figure 2 - Deleted	
EMERGENCY EXIT	52-20
Structure Identification	52-20-1
Figure 1 - Emergency Hatch	
CARGO	52-30
Structure Identification	52-30-1
Figure 1 - Forward Cargo Door	
Figure 2 - Aft Cargo Door	
Figure 3 - Main Cargo Door	
Structure Repair	52-30-2
Service Bulletin Repair List	
Figure 1 - Main Cargo Door Skin Repair at Window	
Figure 2 - Deleted	
Figure 3 - Cargo Door Outer Skin Repair	

BOEING PROPRIETARY - Copyright © - Unpublished Work - See title page for details.

Subject	Subject No.
SERVICE	52-40
Structure Identification	52-40-1
Figure 1 - Forward Galley Door	
Figure 2 - Aft Galley Door	
Figure 3 - Access and Blowout Door	
Figure 4 - Forward Access Door	
Figure 5 - Auxiliary Power Unit Cowl Door	
Figure 6 - Equipment Access Door	
Structure Repair	52-40-2
Service Bulletin Repair Chart	
CREW DOORS	52-50
Structure Identification	52-50-1
Figure 1 - Crew Door	
Structure Repair	52-50-2
Figure 1 - Crew Door Fiberglass Honeycomb Panels	
ENTRANCE STAIRS (FORWARD AIRSTAIR)	52-60
Structure Identification	52-60-1
Figure 1 - Forward Airstair Door	
Figure 2 - Forward Airstair	
LANDING GEAR	52-80
Structure Identification	52-80-1
Figure 1 - Nose Landing Gear Door Structure Identification (Glass Fabric NLG Doors)	
Figure 1A - Nose Landing Gear Door Structure Identification (Graphite Composite NLG Doors)	
Figure 1B - Nose Landing Gear Door Fitting Identification (Graphite Composite NLG Doors)	
Figure 2 - Main Landing Gear Door Structure Identification (Metal MLG Doors)	
Figure 2A - Main Landing Gear Door Structure Identification (Graphite Composite MLG Doors)	
Figure 2B - Main Landing Gear Door Fairing Skin Structure Identification (Graphite Composite MLG Doors)	
Figure 2C - Main Landing Gear Door Fitting Identification (Graphite Composite MLG Doors)	
Figure 3 - Gravel Deflector Fairing and Nose Gear Door - Material Identification	
Structure Repair	52-80-2
Figure 1 - Nose Landing Gear Door Structure Repair (Graphite Composite NLG Doors)	
Figure 2 - Main Landing Gear Door Structure Repair (Graphite Composite MLG Doors)	
Figure 3 - Main Landing Gear Door Fairing Skin Repair (Graphite Composite MLG Doors)	

BOEING PROPRIETARY - Copyright © - Unpublished Work - See title page for details.

DOORS

1. General

A. This chapter contains informatin pertaining to passenger/crew door, forward airstairs, aft airstairs, emergency exits, cargo doors, service door (galley only), fixed interior doors, entrance stairs and landing gear doors.

B. Materials of these structural components are tabulated, and their location and arrangement are shown by illustrations.

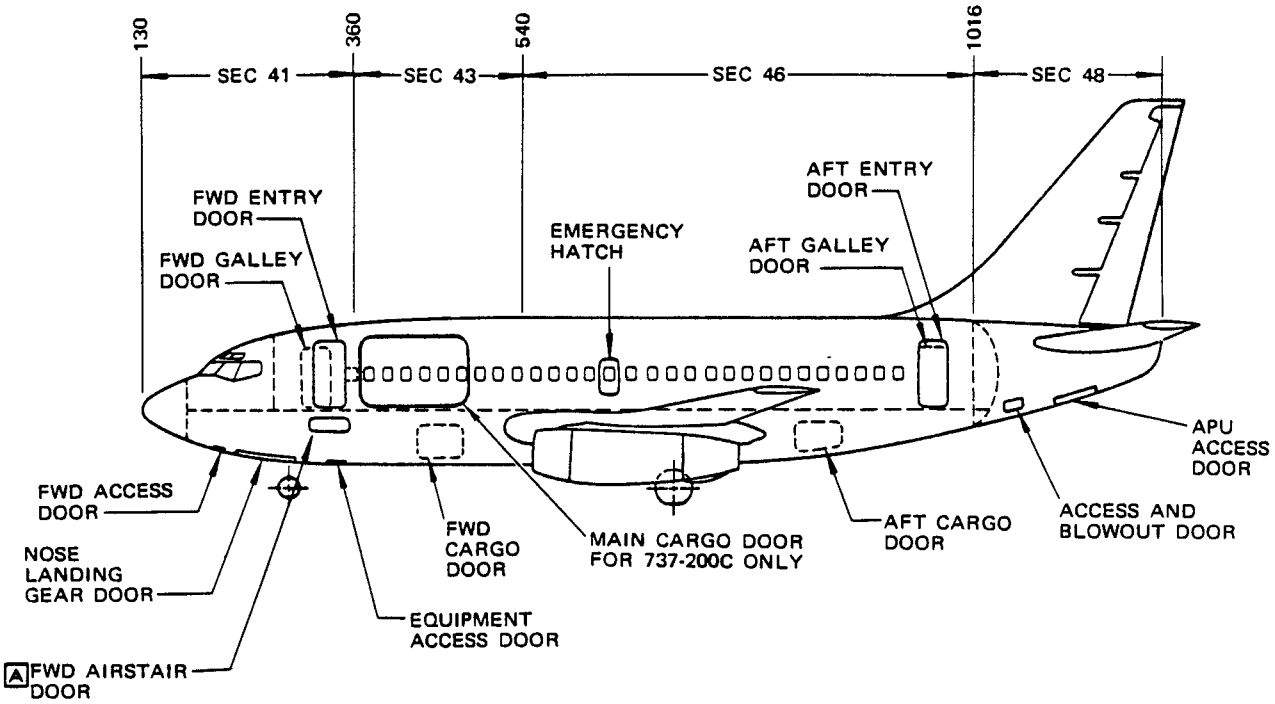

A FORWARD AIRSTAIR AND AIRSTAIR DOOR COMBINATION IS A CUSTOMER OPTION

Door Location Diagram
Figure 1

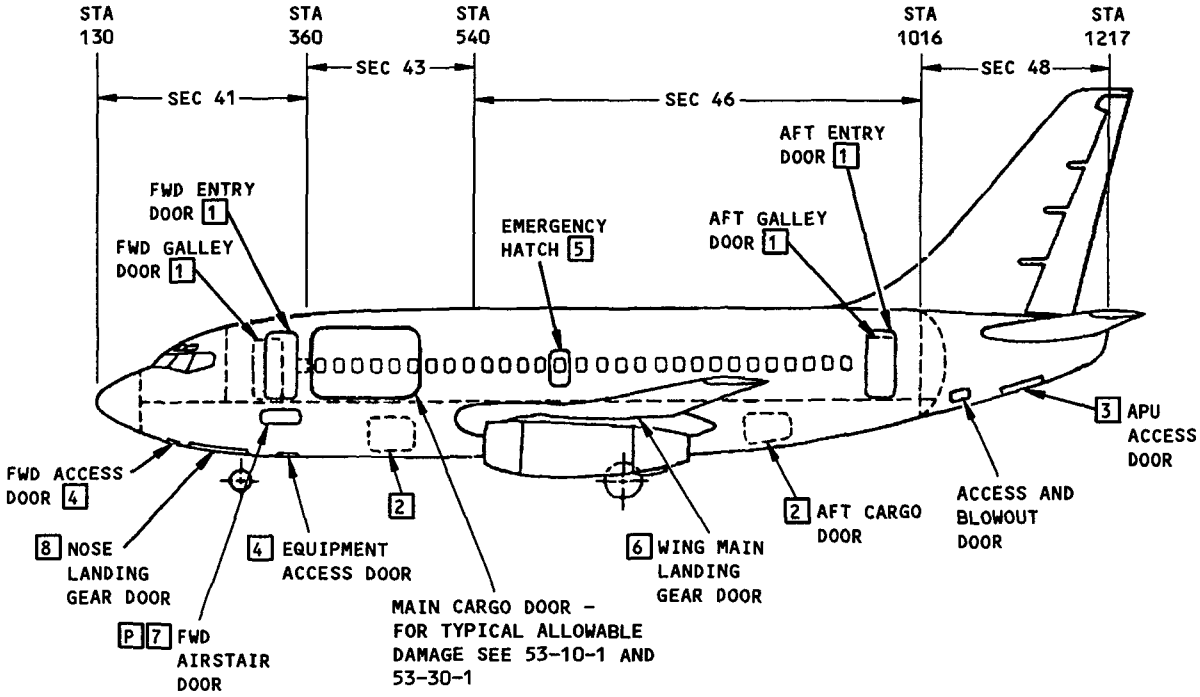

NOTES

- DAMAGE, SUCH AS BLENDOUTS, TRIMOUTS OR DENTS:
  - THAT OCCUR TO A STRUCTURALLY SIGNIFICANT ITEM (SSI) GIVEN IN SRM 51-00-4, FIG. 3 AND,
  - THAT ARE WITHIN THE ALLOWABLE DAMAGE LIMITS OF THE BOEING SRM,

  DO NOT HAVE AN EFFECT ON THE DAMAGE TOLERANCE PROPERTIES OF THE SSI. THEREFORE, EXISTING SUPPLEMENTAL STRUCTURAL INSPECTION DOCUMENT (SSID) INSPECTION PROGRAMS REMAIN EFFECTIVE.
- WHERE THE ALLOWABLE LIMITS HAVE BEEN EXCEEDED, A REPAIR MUST BE MADE OR THE DAMAGED ITEM REPLACED. MAINTAIN FASTENER EDGE MARGIN AS GIVEN IN SRM 51-30-6 FOR ALL REPAIRS.

A HOLES, CRACKS, SCRATCHES OR GOUGES IN EXTERNAL SKIN PANELS MUST NOT EXCEED THE VALUES GIVEN IN FIG. 2. HOLES IN EXTERNAL SKIN MUST BE REPAIRED.

B SCRATCHES OR GOUGES THAT ARE NOT MORE THAN 25% OF MATERIAL THICKNESS ARE PERMITTED IF THEY ARE CLEANED OUT AS SHOWN IN DETAIL I.

C HOLES UP TO 1.00 INCH DIAMETER IN INTERNAL SKIN ARE PERMITTED IF THEY ARE AT LEAST 30t FROM AN EDGE.

D NICKS IN THE EDGES OF FRAME FLANGES UP TO 0.15 INCH DEPTH ARE PERMITTED IF THEY ARE CLEANED OUT AS SHOWN IN DETAIL II, AND EDGE MARGINS ARE MAINTAINED.

E SMOOTH DENTS IN EXTERNAL SKINS FREE FROM PULLED OR LOOSE RIVETS, SHARP CREASES, GOUGES OR CRACKS ARE PERMITTED IF THE LIMITS SHOWN IN SRM 53-30-1 FIG. 1 ARE NOT EXCEEDED FOR A SECTION IN ALL DIRECTIONS.

Allowable Damage to Doors
Figure 1 (Sheet 1)

BOEING PROPRIETARY - Copyright © - Unpublished Work - See title page for details.

STRUCTURAL REPAIR

[F] SMOOTH DENTS FREE FROM PULLED OR LOOSE RIVETS, SHARP CREASES, GOUGES OR CRACKS ARE ALLOWABLE PROVIDED THAT THE LIMITS SHOWN IN DETAIL III ARE NOT EXCEEDED.

[G] CRACKS IN THE INTERNAL SKIN SHOULD BE STOP DRILLED 0.25 INCH DIAMETER AT THE EXTREMITIES OR COMPLETELY CLEANED OUT. CRACKS UP TO 1.0 INCH LONG OR CLEANED OUT AREAS UP TO 1.0 INCH DIAMETER AS SHOWN IN DETAIL IV, ARE ALLOWABLE PROVIDED THAT THE EDGE MARGINS FOR ATTACHING FASTENERS ARE MAINTAINED, PROVIDED THEY ARE AT LEAST 15t FROM ANY EDGE EXCEPT AT SKIN EDGES WHERE THE MAXIMUM LENGTH OF A CLEANED OUT CRACK IS 0.15 INCH AS SHOWN IN DETAIL II.

[H] CRACKS IN THE EDGES OF FRAME FLANGES SHOULD BE CLEANED OUT AS SHOWN IN DETAIL II AND PROVIDED THAT THEY ARE NOT DEEPER THAN 0.15 INCH, ARE ALLOWABLE. ELSEWHERE CRACKS UP TO 1.0 INCH LONG ARE PERMITTED PROVIDED THAT 0.25 INCH DIAMETER STOP HOLES ARE DRILLED AT THE EXTREMITIES, EXCEPT THAT CRACKS IN THE DOOR FRAMES OR BACKUP STIFFENERS AT THE STOP FITTINGS ON THE EQUIPMENT ACCESS DOOR ARE NOT ALLOWED AND MUST BE REPAIRED PRIOR TO THE NEXT PRESSURIZED FLIGHT.

[J] HOLES NOT GREATER THAN 0.25 INCH DIAMETER AND NOT CLOSER TO EACH OTHER THAN 1.0 INCH ARE ALLOWABLE PROVIDED THEY DO NOT EXTEND INTO THE BEND AREA OF FORMED PARTS AFTER CLEAN UP, OR CLOSER TO A FREE EDGE THAN 1-1/2 DIAMETERS.

[K] REPAIR CRACKS IN EXTERNAL SKIN.

[L] FOR ALMUNIUM HONEYCOMB ALLOWABLE DAMAGE REFER TO 51-40-6.

[M] FOR ALLOWABLE DAMAGE TO GLASS FIBER PARTS REFER TO 51-40-6.

[N] CRACKS CLEANED UP BY DRILLING A HOLE NOT EXCEEDING 0.25 DIAMETER ARE ALLOWED PROVIDED THAT THEY ARE FILLED WITH A SUITABLE RIVET, AND NO TWO HOLES ARE LESS THAN 1.0 APART. LARGER CRACKS MUST BE REPAIRED. CRACKS IN THE EDGES OF FRAMEFLANGES NOT DEEPER THAN 0.15 MAY BE REMOVED AS SHOWN IN DETAIL II.

[O] HOLES UP TO 0.25 DIAMETER MAY BE FILLED WITH A SUITABLE RIVET, PROVIDED THAT NO TWO HOLES ARE LESS THAN 1.0 APART. LARGER HOLES MUST BE REPAIRED.

[P] FORWARD AIRSTAIRS AND AIRSTAIRS DOOR COMBINATION IS A CUSTOMER OPTION.

[Q] CRACKS IN THE EDGES OF FRAME FLANGES SHOULD BE CLEANED OUT AS SHOWN IN DETAIL II AND PROVIDED THAT THEY ARE NOT DEEPER THAN 0.15 INCH, ARE ALLOWABLE. ELSEWHERE, SINGLE CRACKS UP TO 2.0 INCHES LONG ARE PERMITTED PROVIDED THAT 0.25 INCH DIAMETER STOP HOLES ARE DRILLED AT THE CRACK EXTREMITIES AND NO CRACKS OR OTHER STRUCTURAL ANOMILIES ARE PRESENT IN OTHER STRUCTURAL COMPONENTS. INSPECT FOR CRACK GROWTH PRIOR TO EACH 75 LANDINGS INTERVAL AND MAKE PERMANENT REPAIRS WITHIN 100 FLIGHT HOURS.

[R] FOR DAMAGE AT LIGHTNING HOLES, SEE DETAIL V.

[S] MAXIMUM 0.15 INCH LONG CRACKS ARE PERMITTED IF THEY ARE IN THE EDGES OF WEBS AND FLANGES, AND THEY ARE REMOVED AS SHOWN IN DETAIL II.

Allowable Damage to Doors
Figure 1 (Sheet 2)

BOEING PROPRIETARY - Copyright © - Unpublished Work - See title page for details.

	LOCATION	ALLOWABLE DAMAGE			
		CRACKS	NICKS SCRATCHES AND GOUGES	DENTS	HOLES
1	ENTRY DOORS AND GALLEY DOORS EXTERNAL SKIN INTERNAL SKIN OTHER STRUCTURE	REFER TO FIGURE 6 REFER TO FIGURE 6 REFER TO FIGURE 7	REFER TO FIGURE 6 REFER TO FIGURE 6 REFER TO FIGURE 7	REFER TO FIGURE 6 REFER TO FIGURE 6 REFER TO FIGURE 7	REFER TO FIGURE 6 REFER TO FIGURE 6 REFER TO FIGURE 7
2	CARGO DOORS (EXCEPT MAIN CARGO DOOR ON 737-200C) EXTERNAL SKIN INTERNAL SKIN BEAMS (EXCEPT LOWER CROSS BEAMS AND AFT CARGO DOOR UPPER BEAM) FRAMES AND LOWER AND UPPER CROSS BEAMS. REFER TO SBs 737-52A1079 AND 737-52A1100.	A G R Q S	A B R B D B D	E F F F	A C J J
3	APU DOOR EXTERNAL SKIN FRAME	K H	B B D	E F	A J
4	SERVICE DOORS (PRESSURIZED AND NON-PRESSURIZED) EXTERNAL SKIN INTERNAL SKIN FRAME	K G H	B B B D	E F F	A C J
5	EMERGENCY HATCH EXTERNAL SKIN INTERNAL SKIN FRAME	A G H	A B B D	E F F	A C J
6	MAIN LANDING GEAR DOORS CENTER AND INNER DOORS EXTERNAL SKIN INTERNAL SKIN FRAME OUTER DOOR	L L H N	L L D B D B	L L F F	L L J P
7	FWD AIRSTAIR DOOR EXTERNAL SKIN INTERNAL SKIN FRAME	A G H	A B B D	E F F	A C J
8	NOSE LANDING GEAR DOORS	M	M	M	M

Allowable Damage to Doors
Figure 1 (Sheet 3)

BOEING PROPRIETARY - Copyright © - Unpublished Work - See title page for details.

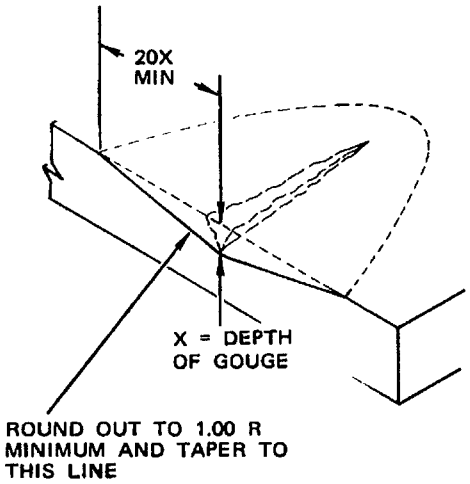

NICKS AND GOUGES
DETAIL I

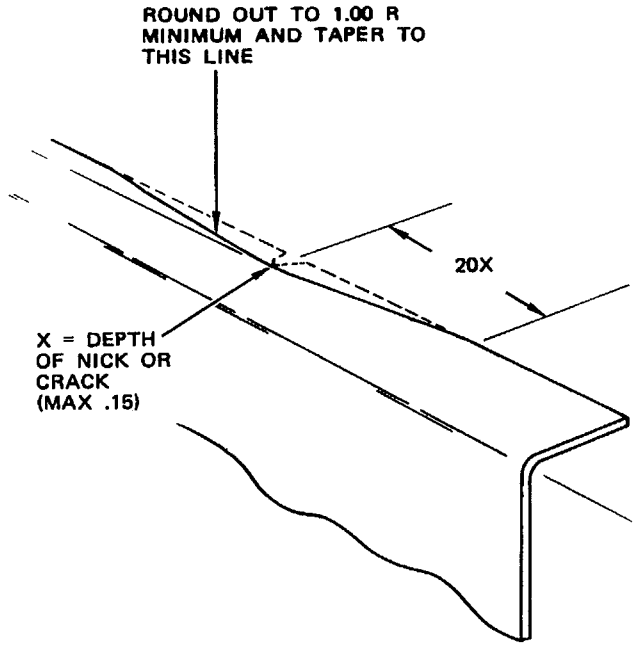

EDGE NICKS AND CRACKS
DETAIL II

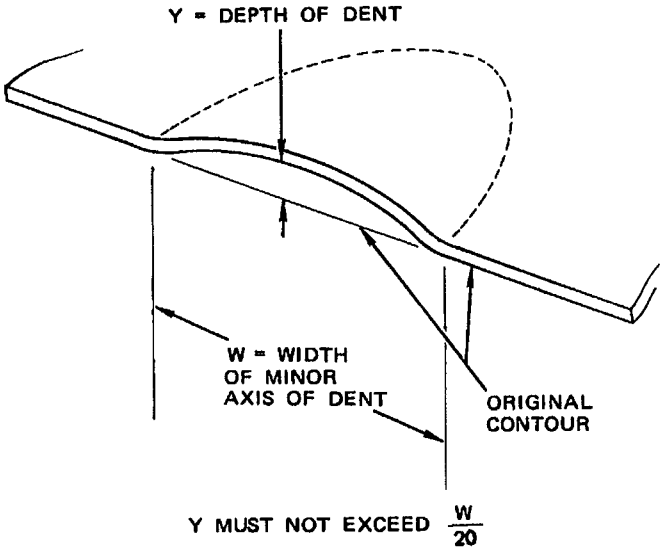

DENTS
DETAIL III

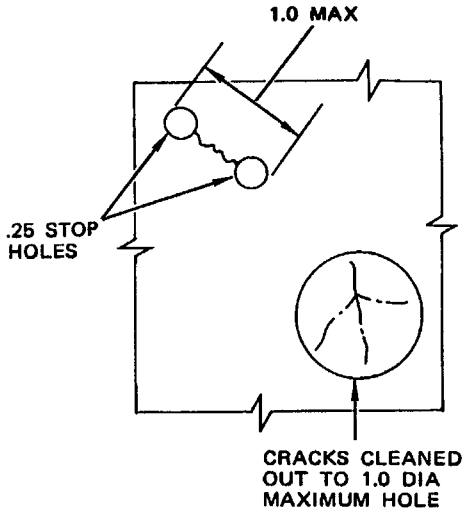

CRACKS

DETAIL IV

Allowable Damage to Doors
Figure 1 (Sheet 4)

F14603

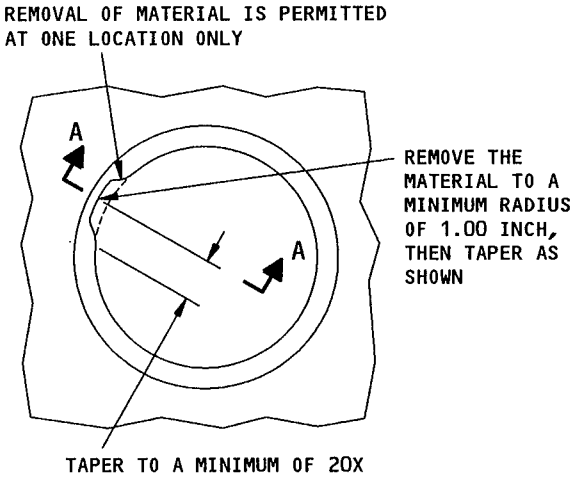

REMOVAL OF DAMAGED MATERIAL AT AN EDGE OF A FLANGED HOLE

DETAIL V

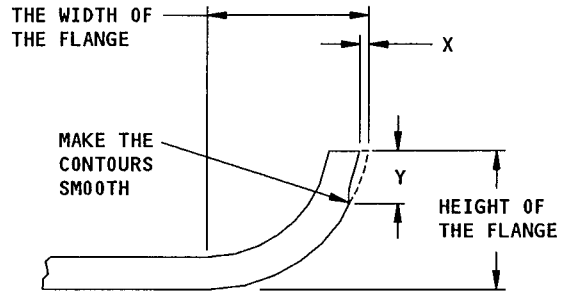

X = DEPTH OF THE MATERIAL THAT IS REMOVED
= A MAXIMUM OF 50 PERCENT OF THE FLANGE WIDTH, OR 0.10 INCH, THAT WHICH IS LESS

Y = LENGTH OF THE MATERIAL THAT IS REMOVED
= A MAXIMUM OF 50 PERCENT OF THE FLANGE HEIGHT, OR 0.10 INCH, THAT WHICH IS LESS

SECTION A-A

Allowable Damage to Doors
Figure 1 (Sheet 5)

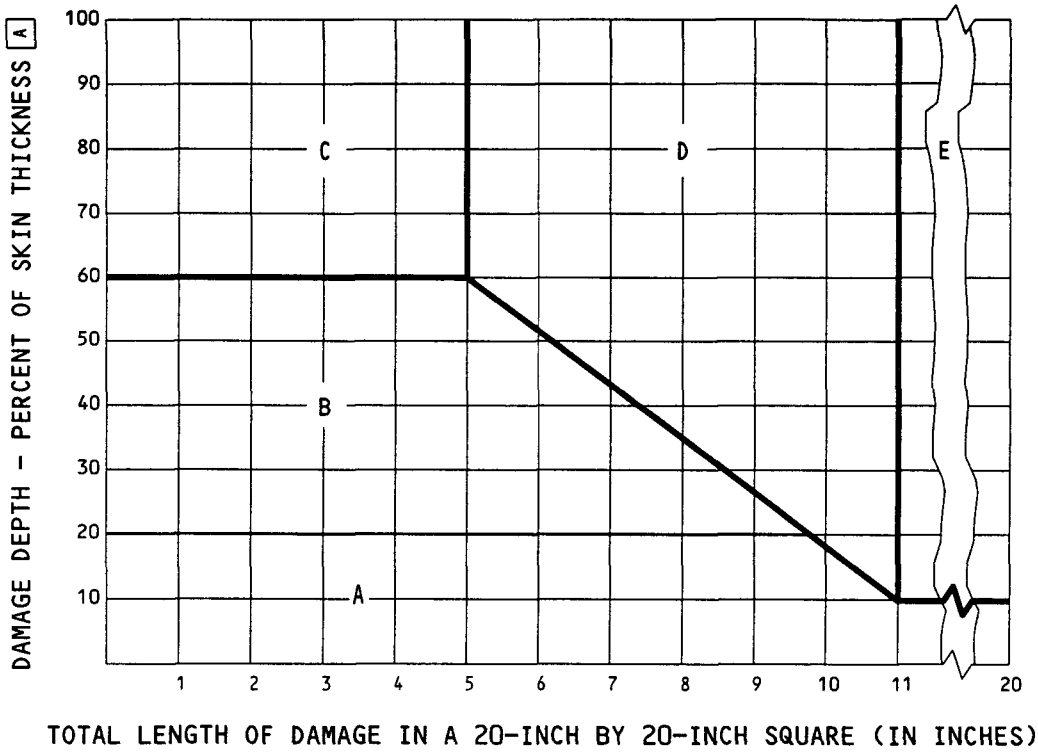

NOTES

- DAMAGE, SUCH AS BLENDOUTS, TRIMOUTS, OR DENTS:
  - THAT OCCUR TO A STRUCTURALLY SIGNIFICANT ITEM (SSI) GIVEN IN SRM 51-00-4, FIG. 3 AND,
  - THAT ARE WITHIN THE ALLOWABLE DAMAGE LIMITS OF THE BOEING SRM,

  DO NOT HAVE AN EFFECT ON THE DAMAGE TOLERANCE PROPERTIES OF THE SSI. THEREFORE, EXISTING SUPPLEMENTAL STRUCTURAL INSPECTION DOCUMENT (SSID) INSPECTION PROGRAMS REMAIN EFFECTIVE.

[A] THE PERCENT OF THE SKIN THICKNESS IS CALCULATED FROM THE NOMINAL THICKNESS GIVEN ON THE PRODUCTION DRAWING FOR THE SKIN. THE NOMINAL THICKNESS DOES NOT INCLUDE THE THICKNESS OF DOUBLERS, TRIPLERS OR STRAPS.

[B] CABIN PRESSURE LIMITS ARE FOR SKIN DAMAGE IN THE PRESSURIZED FUSELAGE CAVITY ONLY.

Damage Limits for Pressurized Door Exterior Skin Panels
Figure 2 (Sheet 1)

BOEING PROPRIETARY - Copyright © - Unpublished Work - See title page for details.

CHART AREA	DAMAGE TREATMENT	ALLOWABLE AIRPLANE OPERATIONS
A	CLEAN UP AS SPECIFIED IN FIGURE 1	NO FLIGHT RESTRICTIONS
B	CLEAN UP AS SPECIFIED IN FIGURE 1 TO DAMAGE DEPTH.	LIMITED TO 50 HOURS OF FLIGHT INCLUDING REVENUE FLIGHTS.
	DO AN APPLICABLE REPAIR AS GIVEN IN SRM 52-00-3, FIGURE 2 & 3 EXCEPT: - DO NOT USE THE PART 2 FILLER - DO NOT MAKE THE CUTOUT	REFER TO THE APPLICABLE REPAIR FOR THE LIMITS.
C	CLEAN UP AS SPECIFIED IN FIGURE 1 TO DAMAGE DEPTH. STOP DRILL 0.25 INCH DIAMETER HOLES AT THE ENDS OF CRACKS.	A NON-REVENUE FLIGHT TO A REPAIR STATION IS PERMITTED IF THE APPLICABLE REGULATORY AUTHORITY GIVES APPROVAL BEFORE THE FLIGHT. IT IS RECOMMENDED THAT THE PROPOSED REPAIR PROCEDURE BE GIVEN TO BOEING. THE MAXIMUM CABIN PRESSURE DIFFERENTIAL LIMITED TO 5.0 PSIG UNLESS THE SKIN IS REPAIRED. B
	DO AN APPLICABLE REPAIR AS GIVEN IN SRM 52-00-3, FIGURE 2 & 3	REFER TO THE APPLICABLE REPAIR FOR THE LIMITS.
D	CLEAN UP AS SPECIFIED IN FIGURE 1 TO DAMAGE DEPTH. STOP DRILL 0.25 INCH DIAMETER HOLES AT THE ENDS OF CRACKS.	A NON-REVENUE FLIGHT TO A REPAIR STATION IS PERMITTED IF THE APPLICABLE REGULATORY AUTHORITY GIVES APPROVAL BEFORE THE FLIGHT. IT IS RECOMMENDED THAT THE PROPOSED REPAIR PROCEDURE BE GIVEN TO BOEING. THE MAXIMUM CABIN PRESSURE DIFFERENTIAL IS NOT MORE THAN ZERO PSIG. B
	DO AN APPLICABLE REPAIR AS GIVEN IN SRM 52-00-3, FIGURE 2 & 3. IF THE DAMAGE DEPTH IS LESS THAN 60% OF THE TOTAL SKIN THICKNESS, THEN: - DO NOT USE THE PART 2 FILLER - DO NOT MAKE THE CUTOUT.	REFER TO THE APPLICABLE REPAIR FOR THE LIMITS.
E	CLEAN UP AS SPECIFIED IN FIGURE 1 TO DAMAGE DEPTH. STOP DRILL 0.25 INCH DIAMETER HOLES AT THE ENDS OF CRACKS.	OPERATION IS NOT PERMITTED BEFORE BOEING AND APPLICABLE REGULATORY AUTHORITY GIVES APPROVAL.
	DO AN APPLICABLE REPAIR AS GIVEN IN SRM 52-00-3, FIGURE 2 & 3.	REFER TO THE APPLICABLE REPAIR FOR THE LIMITS.

Damage Limits for Pressurized Door Exterior Skin Panels
Figure 2 (Sheet 2)

BOEING PROPRIETARY - Copyright © - Unpublished Work - See title page for details.

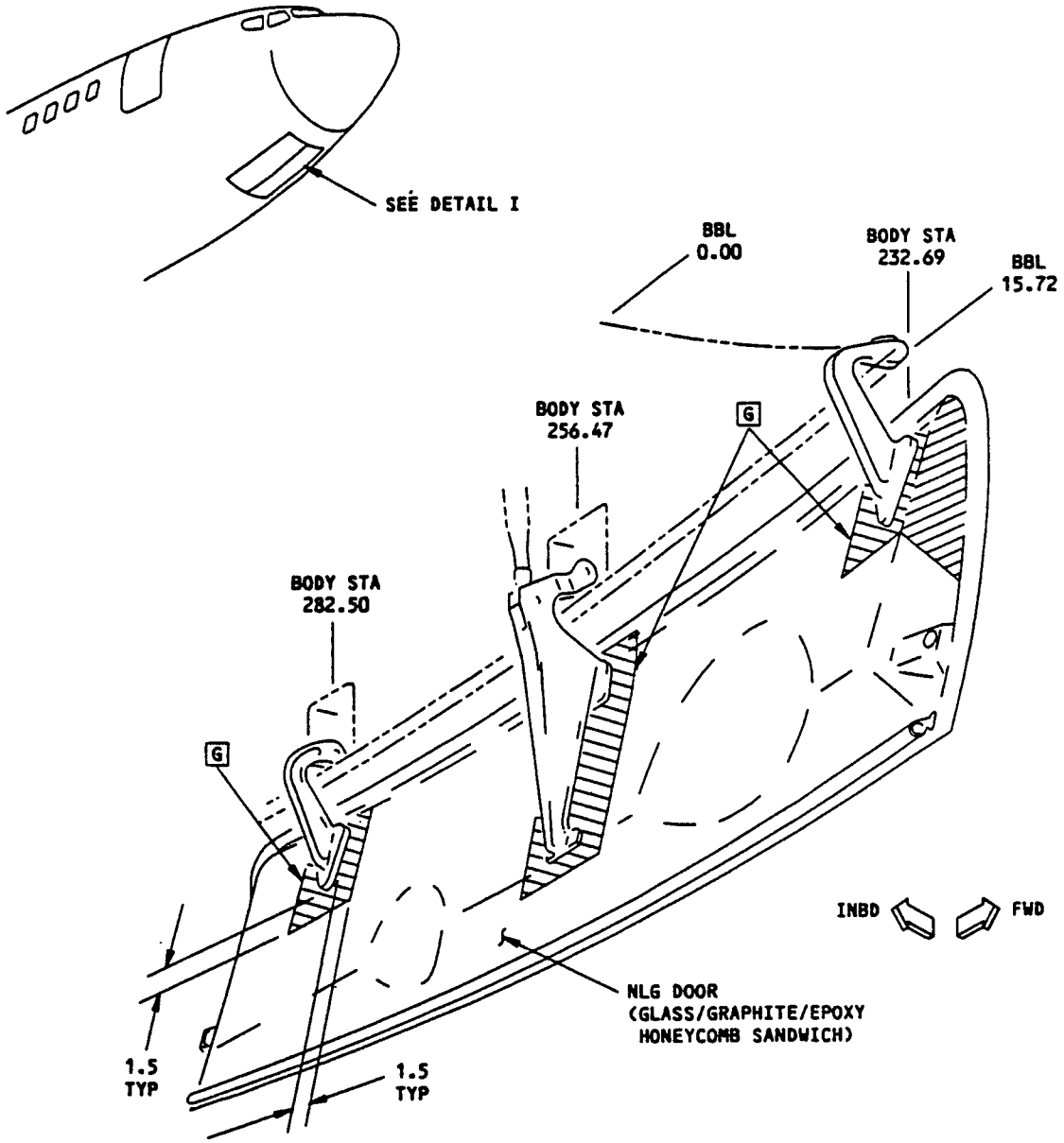

DETAIL I

DESCRIPTION	CRACKS	NICKS, GOUGES, SCRATCHES AND CORROSION	DENTS	HOLES AND PUNCTURES	DELAMINATION
NLG DOOR	B	C	D	E	F

ALLOWABLE DAMAGE FOR DETAIL I

Nose Landing Gear Door Allowable Damage (Graphite Composite NLG Door)
Figure 3 (Sheet 1)

141532

NOTES

- THE ALLOWABLE DAMAGE LIMITS GIVEN IN THIS FIGURE WILL NOT HAVE AN EFFECT ON A STRUCTURALLY SIGNIFICANT ITEM (SSI) GIVEN IN SRM 51-00-4, FIG. 3. THUS, NO CHANGE TO THE SUPPLEMENTAL STRUCTURAL INSPECTION DOCUMENT (SSID) INSPECTION PROGRAM IS NECESSARY.
- FOR INVESTIGATION AND CLEANUP OF DAMAGE, REFER TO SRM 51-10.
- REFINISH REWORKED AREAS AS GIVEN IN AMM 51-20.
- REFER TO SRM 51-70 FOR AERODYNAMIC SMOOTHNESS REQUIREMENTS. WHERE THE DAMAGE EXCEEDS THE LIMITS SHOWN IN SRM 51-70, CONSIDERATION SHOULD BE GIVEN TO THE LOSS OF PERFORMANCE INVOLVED.
- D = MAXIMUM DAMAGE DIMENSION
- TYPICAL DAMAGE TO A PANEL EDGEBAND MAY CONSIST OF EDGE CRUSHING, CRACKS OR DELAMINATION. DAMAGE AROUND HOLES MAY CONSIST OF OVALIZATION, FASTENER PULL-THROUGH OR CRACKS OUT OF HOLE. DAMAGE MAY REDUCE THE EFFECTIVE CROSS SECTIONAL AREA OF AN EDGEBAND. DAMAGE TO EDGES SHOULD BE BLENDED OUT TO LIMITATIONS GIVEN FOR COMPONENT.

[A] PROTECT DAMAGE FROM ENTRANCE OF WATER, SUNLIGHT OR OTHER FOREIGN MATTER BY SEALING WITH ALUMINUM FOIL TAPE (SPEED TAPE) 3M-Y436 OR EQUIVALENT. RECORD LOCATION AND INSPECT AT AIRPLANE "A" CHECK. REPLACE ALUMINUM FOIL TAPE IF ANY PEELING OR DETERIORATION OF TAPE IS EVIDENT. REPAIR DAMAGE NO LATER THAN THE NEXT "C" CHECK.

[B] 0.50 MAXIMUM LENGTH ALLOWED PER SQUARE FOOT OF AREA AND A MINIMUM OF 4D FROM ANY OTHER CRACK. EDGE CRACKS MUST BE REMOVED AS GIVEN IN DETAILS II AND III [A].

[C] DAMAGE ALLOWED ON SURFACE RESIN ONLY. DAMAGE TO FIBERS NOT ALLOWED. CLEAN UP EDGE DAMAGE AS GIVEN IN DETAILS II AND III. [A]

[D] DENTS GENERALLY RESULT IN FIBER DAMAGE OR DELAMINATION WHICH MAY NOT BE APPARENT USING VISUAL OR TAP TESTING METHODS OF DETECTION. DENTS UP TO 1.5 INCH DIAMETER MAXIMUM (D) ARE ALLOWED BUT MUST BE A MINIMUM OF 2.5D (EDGE TO EDGE) FROM ANY OTHER DAMAGE, FASTENER HOLE OR PART EDGE. TREAT AS GIVEN IN [A] NOTE. IF FIBER DAMAGE OR DELAMINATION IS DETECTED REFER TO APPLICABLE DAMAGE DATA IN TABLE [A].

[E] 1.0 MAXIMUM DIA IS ALLOWED PROVIDED DAMAGE IS MINIMUM OF 2.5D FROM OTHER DAMAGE, NEAREST HOLE, OR MATERIAL EDGE. DO NOT CLEAN UP DAMAGE EXCEPT TO REMOVE RESIN BURRS EXTENDING INTO SURFACE CONTOUR [A].

[F] 1.0 SQUARE INCH DELAMINATION IS ALLOWED IN HONEYCOMB AREA IF DAMAGE IS MINIMUM OF 4D FROM OTHER DAMAGE, FASTENER HOLE, OR MATERIAL EDGE. MAXIMUM ALLOWABLE LENGTH OF DELAMINATION IN EDGEBANDS IS EQUAL TO 25% OF THE LENGTH OF THE HONEYCOMB CORE ADJACENT TO THE EDGEBAND. A MAXIMUM OF 0.10 DELAMINATION FROM EDGE IS ALLOWED. PROTECT EDGE DAMAGE AS GIVEN IN [A].

[G] CRITICAL AREA (SHADED). ALLOWABLE DAMAGE SAME AS REST OF PANEL EXCEPT INSPECT EVERY "A" CHECK AND REPAIR WITHIN 90 DAYS [A].

Nose Landing Gear Door Allowable Damage (Graphite Composite NLG Door)
Figure 3 (Sheet 2)

BOEING PROPRIETARY - Copyright © - Unpublished Work - See title page for details.

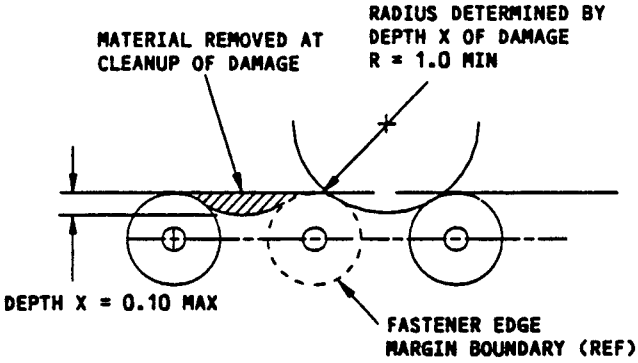

DAMAGE CLEANUP OF EDGES WHERE FASTENER EDGE MARGINS DO NOT OVERLAP

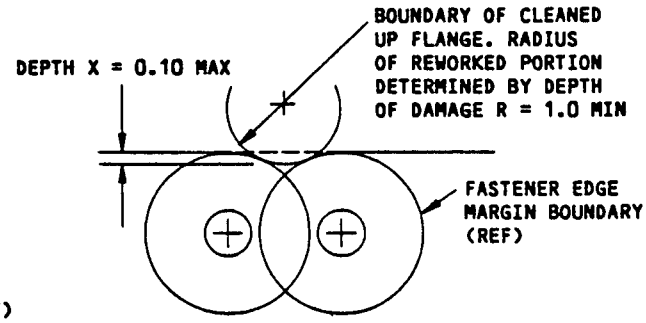

DAMAGE CLEANUP OF EDGES WHERE FASTENER EDGE MARGINS OVERLAP

DETAIL II

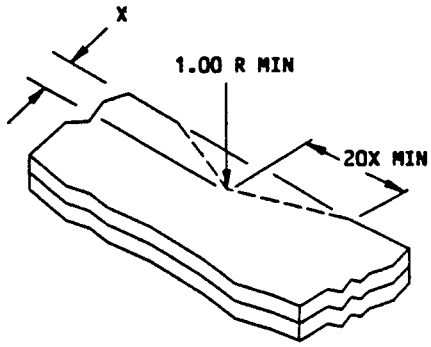

X = DEPTH OF CLEANUP = 0.10 MAX

REMOVAL OF DAMAGE ON AN EDGE
DETAIL III

Nose Landing Gear Door Allowable Damage (Graphite Composite NLG Door)
Figure 3 (Sheet 3)

141539

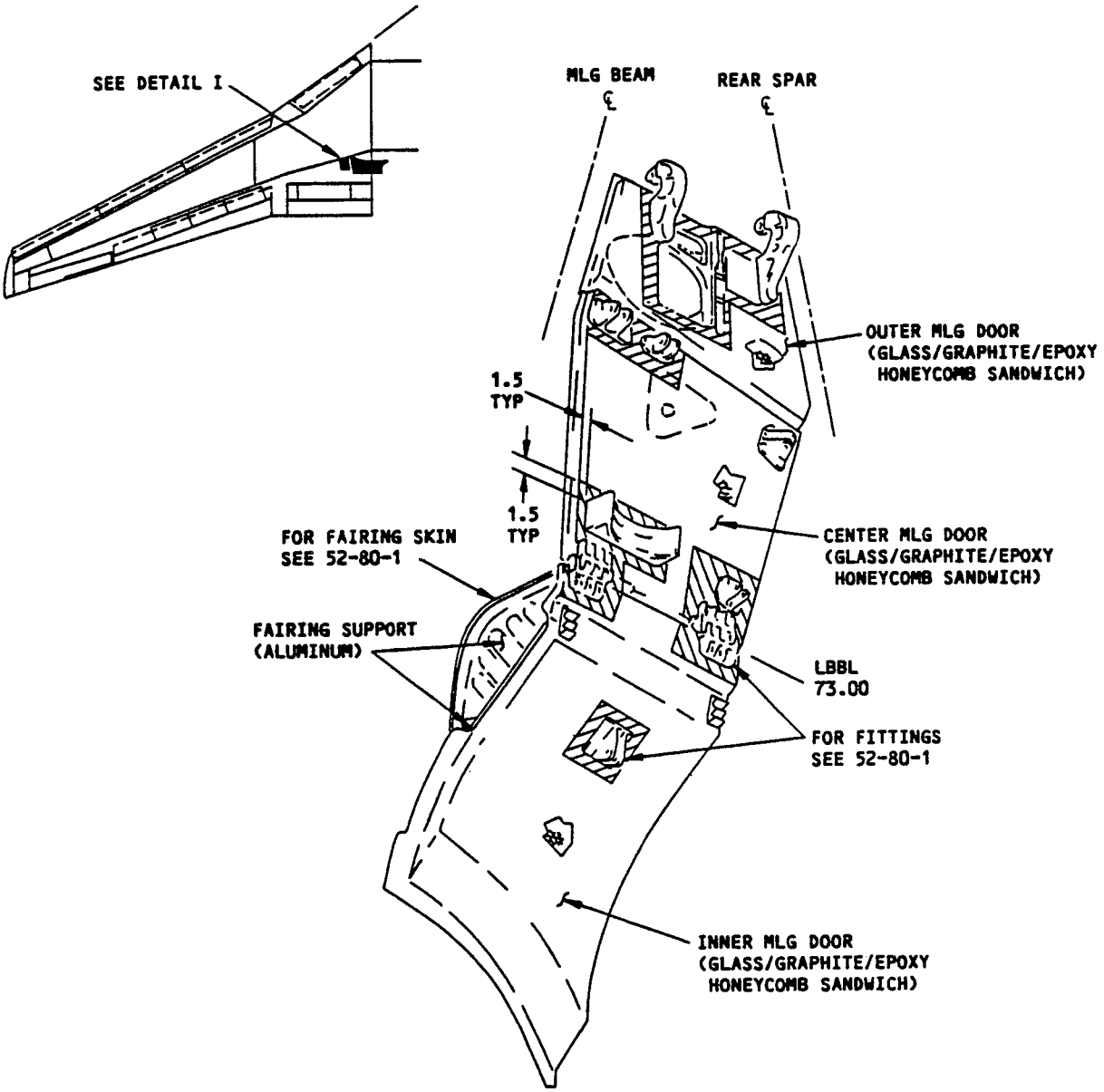

DETAIL I

DESCRIPTION	CRACKS	NICKS, GOUGES, SCRATCHES AND CORROSION	DENTS	HOLES AND PUNCTURES	DELAMINATION
MLG DOORS	B	C	D	E	F
FAIRING SUPPORT	G	H	I	J	———

ALLOWABLE DAMAGE FOR DETAIL I

Main Landing Gear Door Allowable Damage (Graphite Composite MLG Doors)
Figure 4 (Sheet 1)

141541

NOTES

- THE ALLOWABLE DAMAGE LIMITS GIVEN IN THIS FIGURE WILL NOT HAVE AN EFFECT ON A STRUCTURALLY SIGNIFICANT ITEM (SSI) GIVEN IN SRM 51-00-4, FIG. 3. THUS, NO CHANGE TO THE SUPPLEMENTAL STRUCTURAL INSPECTION DOCUMENT (SSID) INSPECTION PROGRAM IS NECESSARY.
- FOR INVESTIGATION AND CLEANUP OF DAMAGE, REFER TO SRM 51-10.
- REFINISH REWORKED AREAS AS GIVEN IN AMM 51-20.
- REFER TO SRM 51-70 FOR AERODYNAMIC SMOOTHNESS REQUIREMENTS. WHERE THE DAMAGE EXCEEDS THE LIMITS SHOWN IN SRM 51-70, CONSIDERATION SHOULD BE GIVEN TO THE LOSS OF PERFORMANCE INVOLVED.
- D = MAXIMUM DAMAGE DIMENSION
- TYPICAL DAMAGE TO A PANEL EDGEBAND MAY CONSIST OF EDGE CRUSHING, CRACKS OR DELAMINATION. DAMAGE AROUND HOLES MAY CONSIST OF OVALIZATION, FASTENER PULL-THROUGH OR CRACKS OUT OF HOLE. DAMAGE MAY REDUCE THE EFFECTIVE CROSS SECTIONAL AREA OF AN EDGEBAND. DAMAGE TO EDGES SHOULD BE BLENDED OUT TO LIMITATIONS GIVEN FOR COMPONENT.

[A] PROTECT DAMAGE FROM ENTRANCE OF WATER, SUNLIGHT OR OTHER FOREIGN MATTER BY SEALING WITH ALUMINUM FOIL TAPE (SPEED TAPE) 3M-Y436 OR EQUIVALENT. RECORD LOCATION AND INSPECT AT AIRPLANE "A" CHECK. REPLACE ALUMINUM FOIL TAPE IF ANY PEELING OR DETERIORATION OF TAPE IS EVIDENT. REPAIR DAMAGE NO LATER THAN THE "C" CHECK.

[B] 0.50 INCH MAX LENGTH IN HONEYCOMB AREA IS PERMITTED FOR EACH SQUARE FOOT OF AREA AND A MINIMUM OF 4D FROM ALL OTHER DAMAGE, FASTENER HOLE, OR PART EDGE. EDGE CRACKS MUST BE REMOVED AS GIVEN IN DETAILS II AND VI [A].

[C] DAMAGE IS PERMITTED ON SURFACE RESIN ONLY. DAMAGE TO FIBERS NOT PERMITTED. CLEAN UP EDGE DAMAGE AS SHOWN IN DETAILS II AND VI [A].

[D] DENTS GENERALLY RESULT IN FIBER DAMAGE OR DELAMINATION WHICH MAY NOT BE APPARENT USING VISUAL OR TAP TESTING METHODS OF DETECTION. DENTS UP TO 1.5 INCH DIAMETER MAXIMUM (D) ARE PERMITTED BUT MUST BE A MINIMUM OF 2.5D (EDGE TO EDGE) FROM ALL OTHER DAMAGE, FASTENER HOLE OR PART EDGE. TREAT AS SHOWN IN NOTE [A]. IF FIBER DAMAGE OR DELAMINATION IS DETECTED, REFER TO THE APPLICABLE DAMAGE DATA IN TABLE [A].

[E] 1.0 INCH MAXIMUM DIA IS PERMITTED IF DAMAGE IS MINIMUM OF 2.5D FROM OTHER DAMAGE, NEAREST HOLE, OR MATERIAL EDGE. DO NOT CLEAN UP DAMAGE EXCEPT TO REMOVE RESIN BURRS THAT GO INTO THE SURFACE CONTOUR [A].

[F] 1.0 SQUARE INCH DELAMINATION IS PERMITTED IN HONEYCOMB AREA PROVIDED DAMAGE IS MINIMUM OF 4D FROM OTHER DAMAGE, FASTENER HOLE, OR MATERIAL EDGE. MAXIMUM ALLOWABLE LENGTH OF DELAMINATION IN EDGEBANDS IS EQUAL TO 25% OF THE LENGTH OF THE HONEYCOMB CORE ADJACENT TO THE EDGEBAND. A MAXIMUM OF 0.10 INCH DELAMINATION FROM EDGE IS PERMITTED. PROTECT EDGE DAMAGE AS GIVEN IN [A].

[G] CRACKS NOT PERMITTED EXCEPT FOR EDGE CRACKS WHICH MUST BE REMOVED AS SHOWN IN DETAILS II,VI,AND VII. ALL OTHER CRACKS TO BE REPAIRED.

[H] REMOVE DAMAGE AS GIVEN IN DETAILS III,IV, VI, AND VII.

[I] DENTS ARE PERMITTED AS GIVEN IN DETAIL IV.

[J] CLEAN OUT DAMAGE UP TO 0.25 INCH MAXIMUM DIA AND NOT CLOSER THAN 2.0 INCHES TO FASTENER HOLE, EDGE OR OTHER DAMAGE. FILL HOLE WITH A 2117-T3 OR T4 ALUMINUM RIVET INSTALLED WET WITH BMS 5-95 SEALANT. ALL OTHER HOLES TO BE REPAIRED.

[K] CRITICAL AREA (SHADED). ALLOWABLE DAMAGE SAME AS REST OF PANEL, EXCEPT INSPECT EVERY "A" CHECK AND REPAIR WITHIN 90 DAYS.

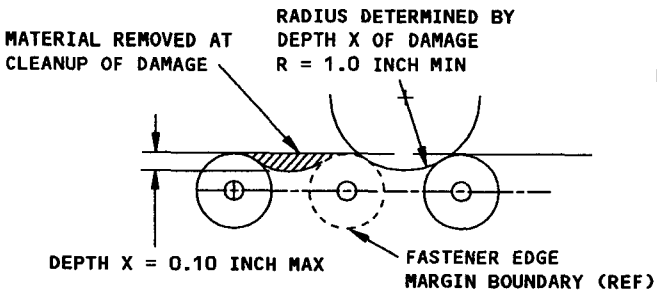

DAMAGE CLEANUP OF EDGES WHERE FASTENER EDGE MARGINS DO NOT OVERLAP

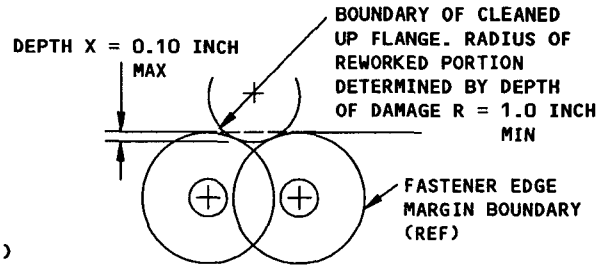

DAMAGE CLEANUP OF EDGES WHERE FASTENER EDGE MARGINS OVERLAP

DETAIL II

Main Landing Gear Door Allowable Damage (Graphite Composite MLG Doors)
Figure 4 (Sheet 2)

BOEING PROPRIETARY - Copyright © - Unpublished Work - See title page for details.

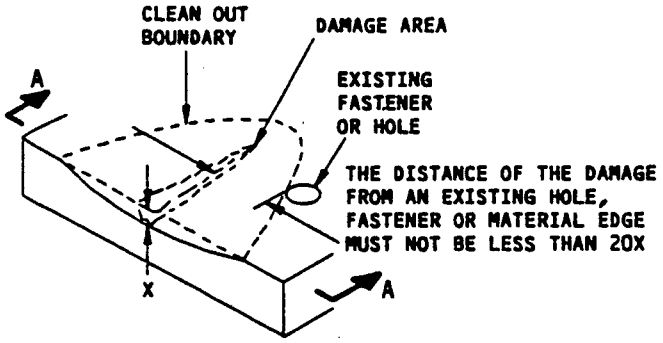

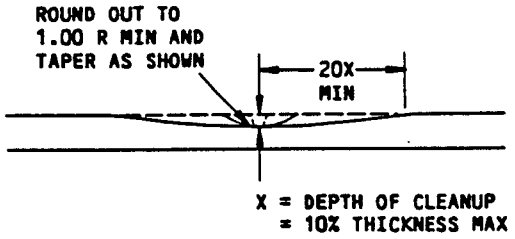

SECTION A-A

REMOVAL OF NICK, GOUGE, SCRATCH AND CORROSION DAMAGE ON A SURFACE
DETAIL III

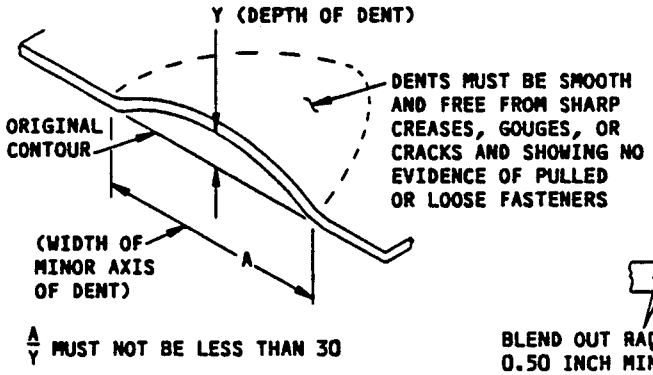

DETAIL IV

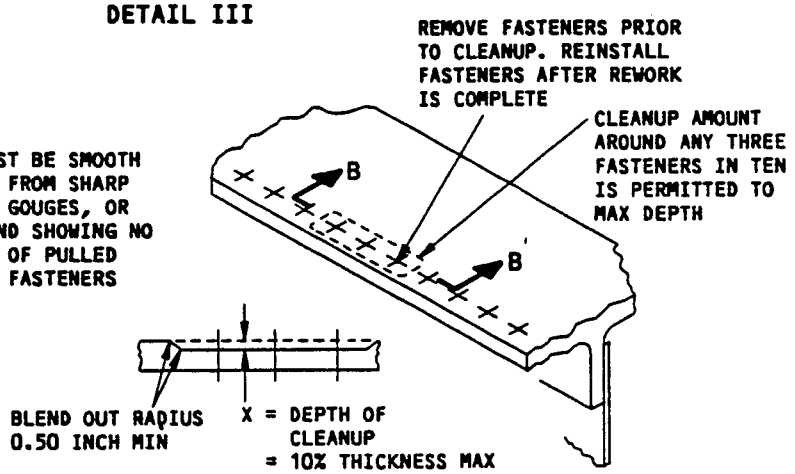

SECTION B-B

DAMAGE CLEANUP
DETAIL V

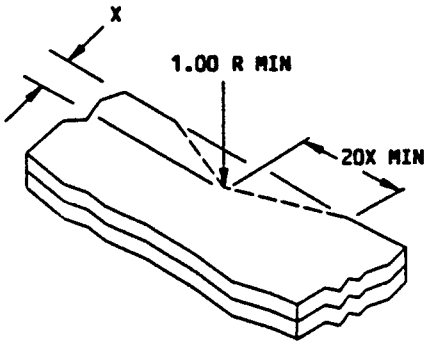

X = DEPTH OF CLEANUP = 0.10 MAX

REMOVAL OF DAMAGE ON AN EDGE
DETAIL VI

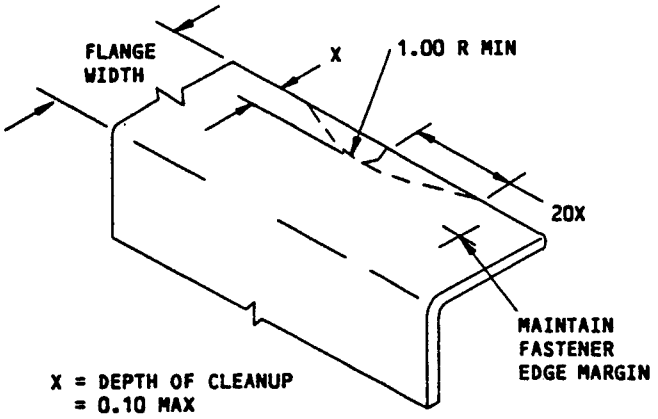

X = DEPTH OF CLEANUP = 0.10 MAX

REMOVAL OF DAMAGE ON AN EDGE
DETAIL VII

Main Landing Gear Door Allowable Damage (Graphite Composite MLG Door)
Figure 4 (Sheet 3)

141536

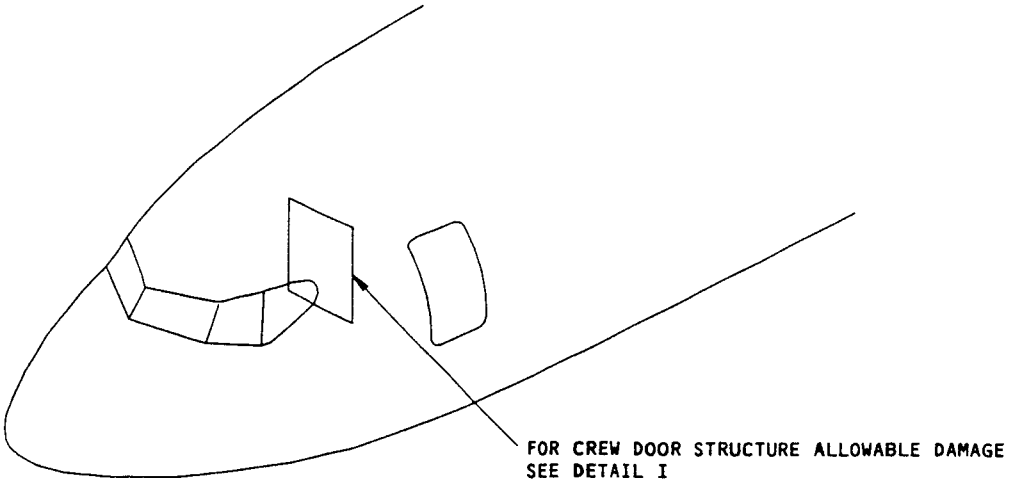

Crew Door Structure Allowable Damage
Figure 5 (Sheet 1)

300909

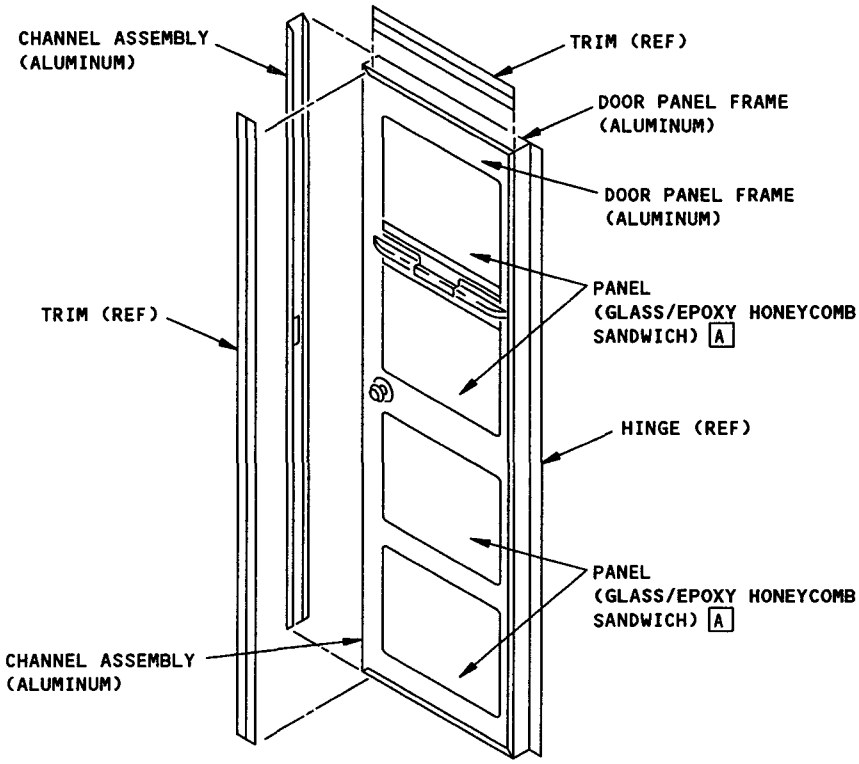

DETAIL I

NOTES

- THE ALLOWABLE DAMAGE LIMITS GIVEN IN THIS FIGURE WILL NOT HAVE AN EFFECT ON A STRUCTURALLY SIGNIFICANT ITEM (SSI) GIVEN IN SRM 51-00-4, FIG. 3. THUS, NO CHANGE TO THE SUPPLEMENTAL STRUCTURAL INSPECTION DOCUMENT (SSID) INSPECTION PROGRAM IS NECESSARY.
- FROM A STRUCTURAL STANDPOINT, ANY AMOUNT OF DAMAGE TO THE CREW DOOR IS ALLOWED, PROVIDED THAT THE FUNCTIONAL UTILITY OF THE DOOR IS NOT IMPAIRED B. FROM AN APPEARANCE STANDPOINT, THE DOOR MAY BE REPAIRED AT ANY TIME AT THE OPTION OF THE OPERATOR.
- REFER TO SRM 51-10-1 FOR INVESTIGATION AND CLEANUP OF DAMAGE.
- FOR REWORKED ALUMINUM SURFACES, APPLY A CHEMICAL CONVERSION COATING AS GIVEN IN SRM 51-10-2.
- REFINISH REWORKED AREAS AS GIVEN IN AMM 53-42-11.

A REMOVE MOISTURE FROM DAMAGE AREA. USE A VACUUM AND HEAT (MAX OF 125°F (52°C)) TO REMOVE MOISTURE FROM HONEYCOMB CELLS. PROTECT DAMAGE FROM ENTRANCE OF WATER, SUNLIGHT, OR OTHER FOREIGN MATTER BY SEALING WITH ALUMINUM FOIL TAPE (SPEED TAPE) 3M-Y436 OR EQUIVALENT. RECORD LOCATION AND INSPECT AT AIRPLANE 'A' CHECK. REPLACE ALUMINUM FOIL TAPE IF ANY PEELING OR DETERIORATION OF THE TAPE IS EVIDENT. REPAIR AT CONVENIENCE OF OPERATOR.

B MAINTAIN THE FOLLOWING FUNCTIONAL REQUIREMENTS: PANEL BLOWOUT DUE TO SUDDEN DEPRESSURIZATION, EMERGENCY EXIT FEATURE, AND ELECTRIC AND KEYED DOOR LOCK FUNCTION.

Crew Door Structure Allowable Damage
Figure 5 (Sheet 2)

BOEING PROPRIETARY - Copyright © - Unpublished Work - See title page for details.

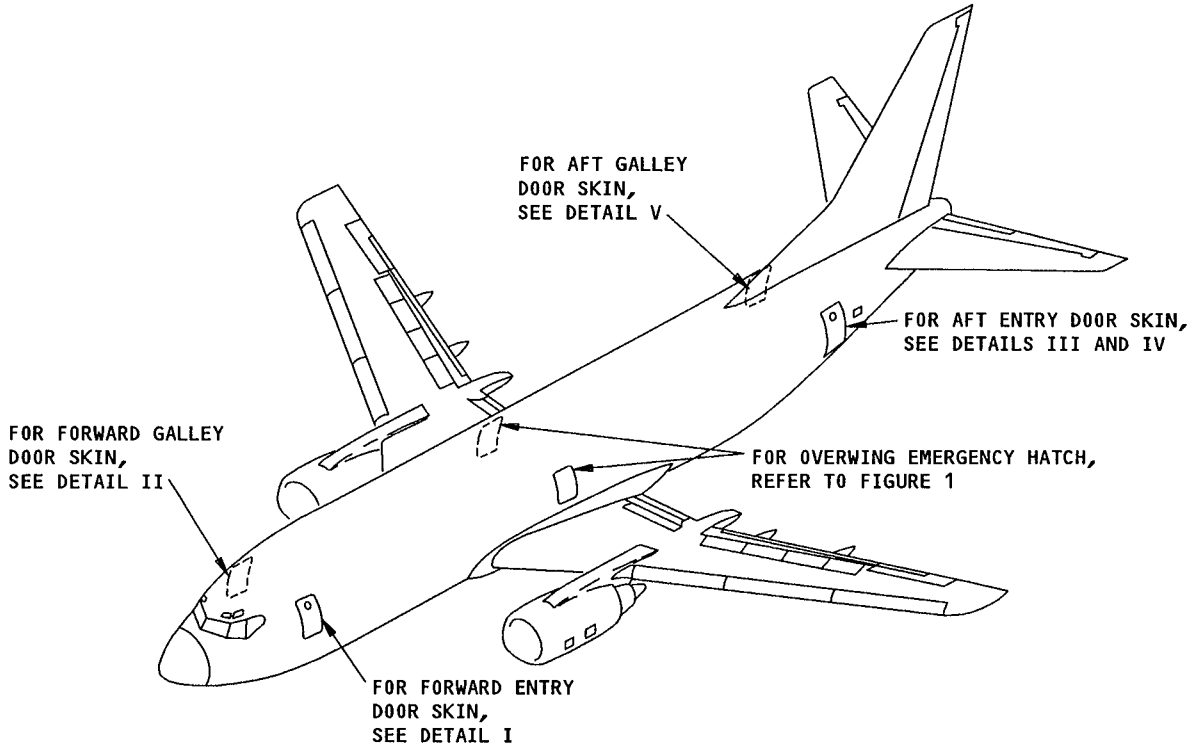

Passenger/Crew Entry Door Skin Allowable Damage
Figure 6 (Sheet 1)

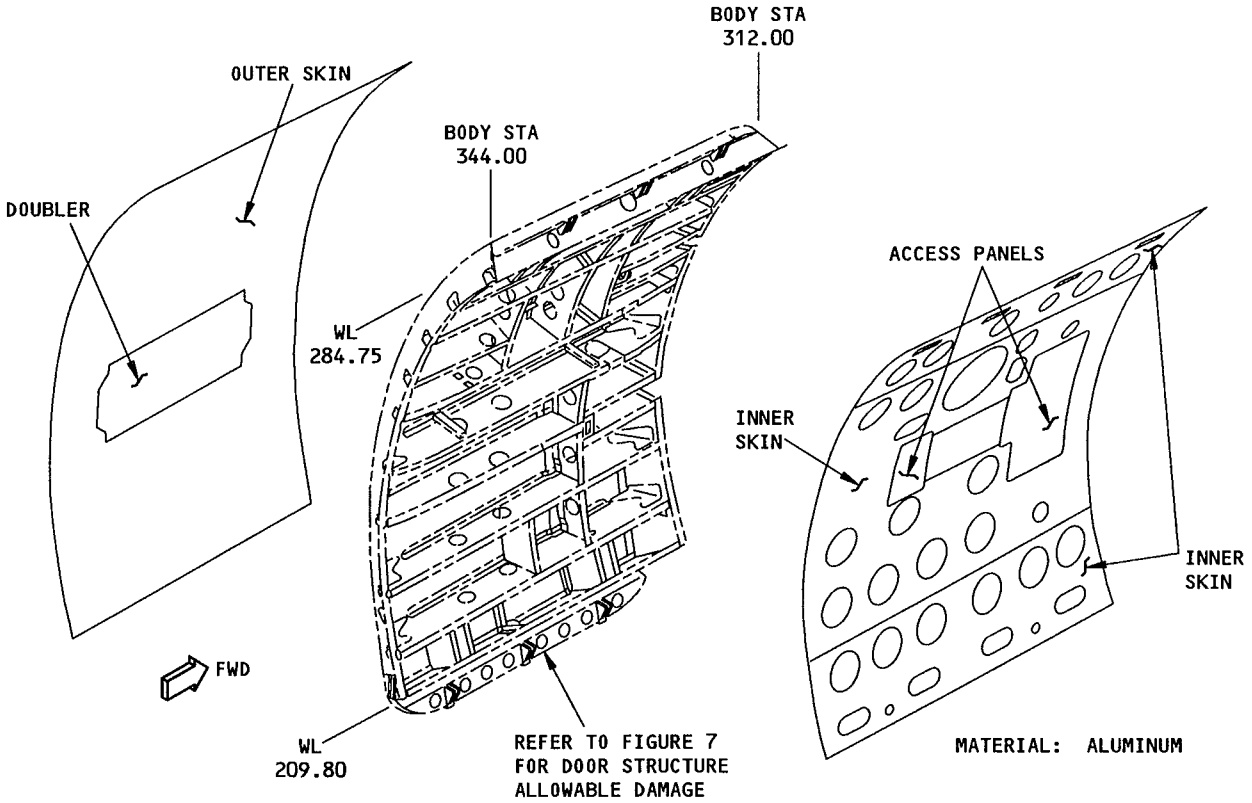

FWD ENTRY DOOR
DETAIL I

DESCRIPTION	CRACKS AND TEARS	NICKS, GOUGES, SCRATCHES AND CORROSION	DENTS	HOLES AND PUNCTURES
OUTER SKIN AND DOUBLER	A	B	C	D
INNER SKIN AND ACCESS PANELS	G	H	I	F

ALLOWABLE DAMAGE FOR DETAIL I

Passenger/Crew Entry Door Skin Allowable Damage
Figure 6 (Sheet 2)

F02045

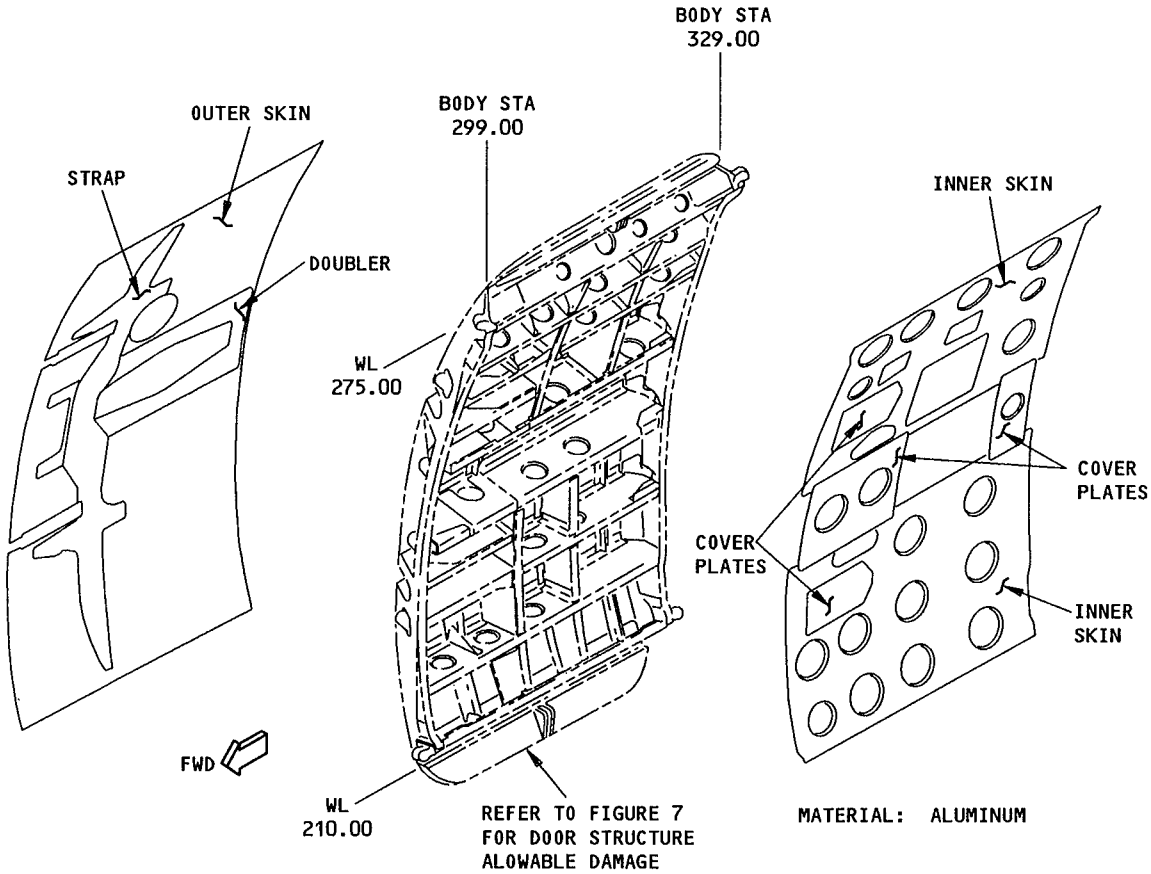

FWD GALLEY DOOR
DETAIL II

DESCRIPTION	CRACKS AND TEARS	NICKS, GOUGES, SCRATCHES AND CORROSION	DENTS	HOLES AND PUNCTURES
OUTER SKIN, DOUBLER, AND STRAP	A	B	C	D
INNER SKINS AND COVER PLATES	G	H	I	F

ALLOWABLE DAMAGE FOR DETAIL II

Passenger/Crew Entry Door Skin Allowable Damage
Figure 6 (Sheet 3)

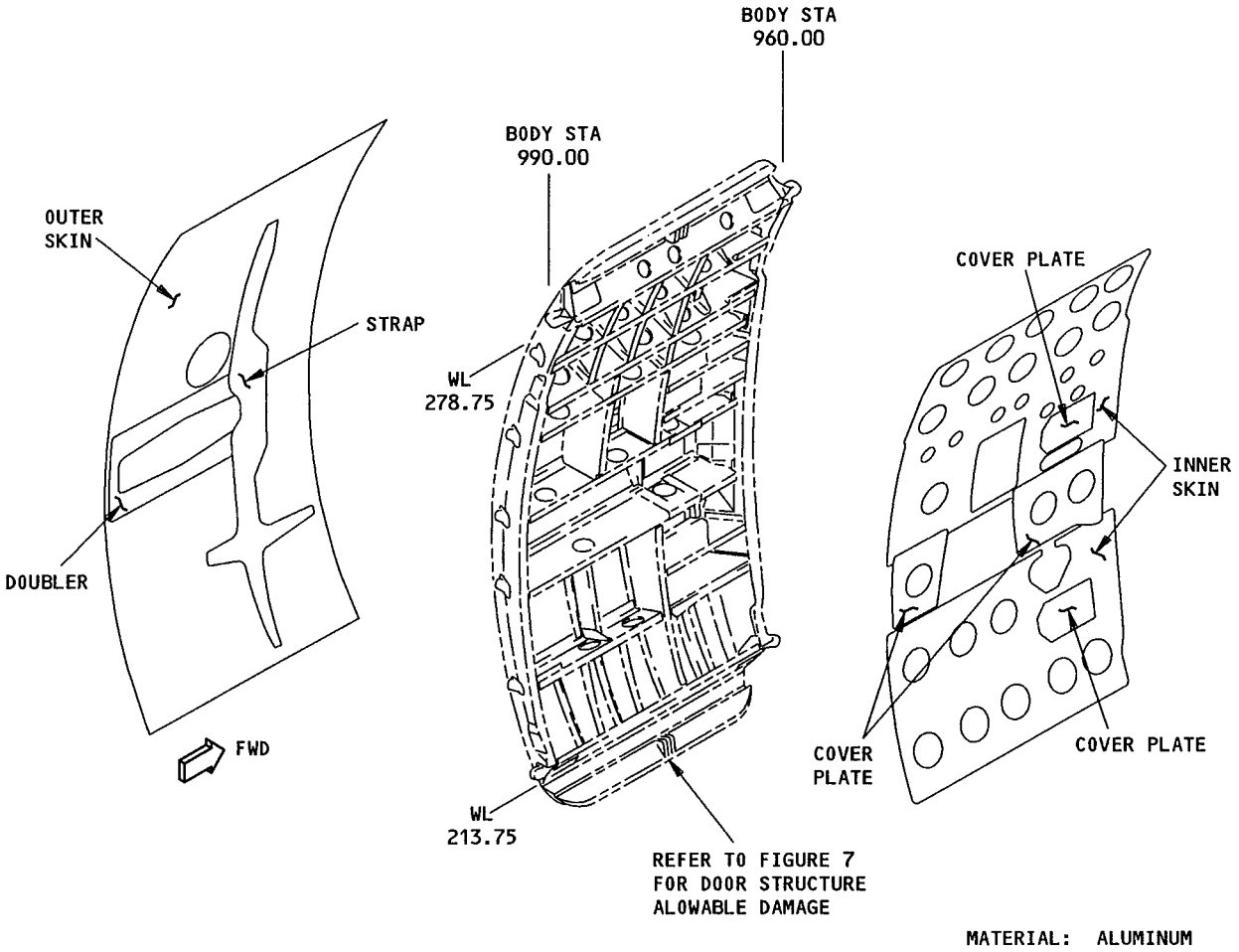

AFT ENTRY DOOR
(WITHOUT AIRSTAIR)
DETAIL III [J]

DESCRIPTION	CRACKS AND TEARS	NICKS, GOUGES, SCRATCHES AND CORROSION	DENTS	HOLES AND PUNCTURES
OUTER SKIN, DOUBLER, AND STRAP	[A]	[B]	[C]	[D]
INNER SKINS AND COVER PLATES	[G]	[H]	[I]	[F]

ALLOWABLE DAMAGE FOR DETAIL III

Passenger/Crew Entry Door Skin Allowable Damage
Figure 6 (Sheet 4)

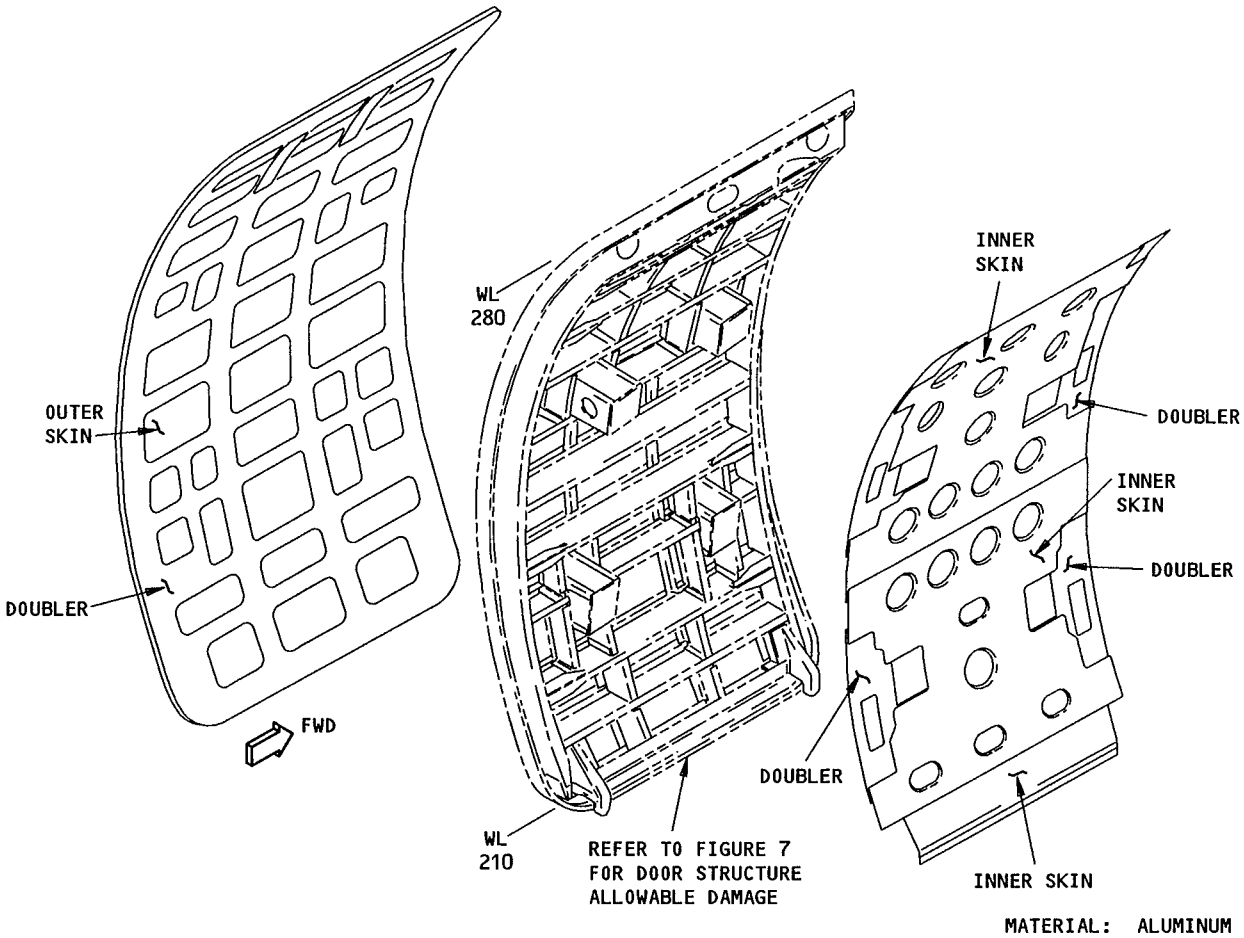

AFT ENTRY DOOR
(WITH AIRSTAIR)
DETAIL IV J

DESCRIPTION	CRACKS AND TEARS	NICKS, GOUGES, SCRATCHES AND CORROSION	DENTS	HOLES AND PUNCTURES
OUTER SKIN AND DOUBLER	A	B	C	D
INNER SKINS AND DOUBLERS	G	H	I	F

ALLOWABLE DAMAGE FOR DETAIL IV

Passenger/Crew Entry Door Skin Allowable Damage
Figure 6 (Sheet 5)

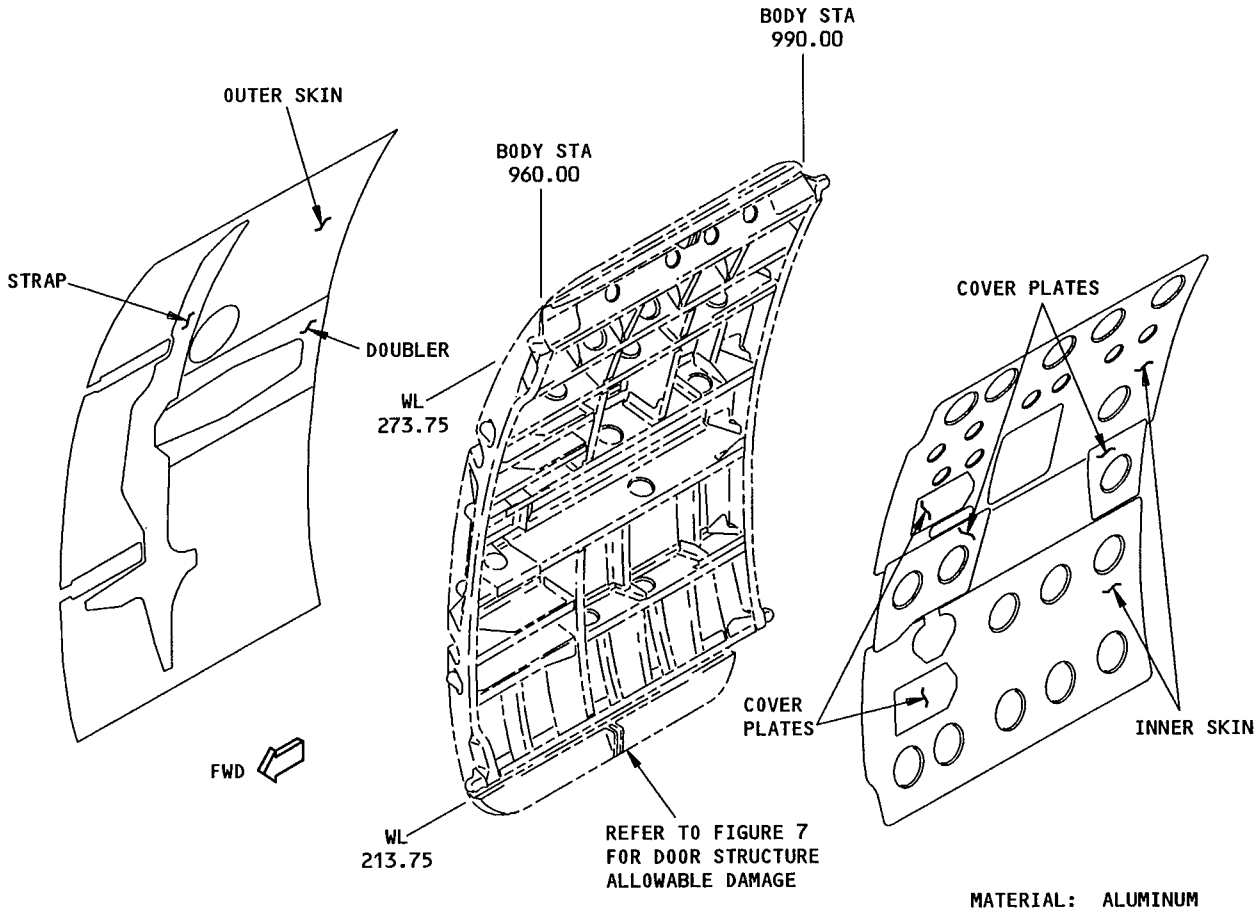

AFT GALLEY DOOR
DETAIL V

DESCRIPTION	CRACKS AND TEARS	NICKS, GOUGES, SCRATCHES AND CORROSION	DENTS	HOLES AND PUNCTURES
OUTER SKIN, DOUBLER, AND STRAP	A	B	C	D
INNER SKINS AND COVER PLATES	G	H	I	F

ALLOWABLE DAMAGE FOR DETAIL V

Passenger/Crew Entry Door Skin Allowable Damage
Figure 6 (Sheet 6)

NOTES

- THE ALLOWABLE DAMAGE LIMITS GIVEN IN THIS FIGURE WILL NOT HAVE AN EFFECT ON A STRUCTURALLY SIGNIFICANT ITEM (SSI) GIVEN IN SRM 51-00-4, FIG. 3. THUS, NO CHANGE TO THE SUPPLEMENTAL STRUCTURAL INSPECTION DOCUMENT (SSID) INSPECTION PROGRAM IS NECESSARY.
- EXAMINE AND REMOVE THE DAMAGE. REFER TO SRM 51-10-1.
- REFER TO FIGURE 2 FOR OPERATING LIMITS IF:
  - YOU HAVE MORE THAN ONE DAMAGE AREA OR
  - YOU HAVE DAMAGE THAT IS LARGER THAN THE ALLOWABLE DAMAGE LIMITS.
- APPLY A CHEMICAL CONVERSION COATING TO THE REWORKED ALUMINUM SURFACE. REFER TO SRM 51-10-2.
- REFINISH THE REWORKED SURFACES. REFER TO AMM 51-20.
- REFER TO SRM 51-10-6 FOR CORROSION REMOVAL PROCEDURES FOR ALUMINUM.
- REFER TO SRM 51-30-6 FOR FASTENER EDGE MARGINS.
- MAKE SURE THE AERODYNAMIC SMOOTHNESS IS SATISFACTORY OR AIRPLANE PERFORMANCE WILL BE REDUCED. REFER TO SRM 51-70.
- NICKS, GOUGES, AND SCRATCHES THAT DO NOT GO THROUGH THE CLAD SURFACE DO NOT REQUIRE REWORK OTHER THAN TO APPLY A PROTECTIVE FINISH. REFER TO SRM 51-10-1.
- T = THICKNESS OF THE SKIN OR THE TOTAL THICKNESS OF THE SKIN AND A DOUBLER, TRIPLER, OR STRAP AT THE DAMAGE LOCATION.

[A] CRACKS AND TEARS ARE NOT PERMITTED.

[B] REMOVE NICKS, GOUGES, SCRATCHES, AND CORROSION AS SHOWN IN DETAILS VI, VII, IX, AND X.

[C] REFER TO FIGURE 8 FOR ALLOWABLE DAMAGE FOR DENTS.

[D] HOLES ARE PERMITTED TO A MAXIMUM DIAMETER OF 0.25 INCH. THE HOLE MUST BE MORE THAN 1.00 INCH AWAY FROM OTHER DAMAGE, HOLES, OR MATERIAL EDGE. FILL THE HOLE WITH A RIVET MADE OF 2117-T3 OR 2117-T4 ALUMINUM ALLOY. INSTALL THE RIVET WET WITH BMS 5-95 SEALANT. FOR HOLES AND PUNCTURES LARGER THAN THE ALLOWABLE DAMAGE, REFER TO [E].

[E] YOU CAN REMOVE HOLES AND PUNCTURES TO A MAXIMUM DIMENSION OF 5.0 INCHES. MAKE A CUTOUT IN THE SHAPE OF A CIRCLE OR AN OVAL. THE CUTOUT MUST BE MORE THAN 1.0 INCH AWAY FROM THE EDGE OF THE SKIN, DOUBLER, TRIPLER, STRAP, OR FITTING.

OPERATING LIMITS ARE NECESSARY IF YOU REMOVE THE DAMAGE. A FERRY FLIGHT WITHOUT PASSENGERS TO A REPAIR STATION IS PERMITTED. THE AIRPLANE CABIN MUST NOT BE PRESSURIZED DURING THE FERRY FLIGHT. AFTER THE FERRY FLIGHT, YOU MUST DO A PERMANENT OR TIME-LIMITED REPAIR.

[F] HOLES ARE PERMITTED TO A MAXIMUM DIAMETER OF 1.0 INCH. THE HOLE MUST BE CIRCULAR AND 30T FROM A MATERIAL EDGE.

[G] REMOVE THE EDGE CRACKS AS SHOWN IN DETAILS VI AND X. OTHER CRACKS ARE PERMITTED UP TO 1.0 INCH IN LENGTH. DRILL 0.25 INCH DIAMETER STOP HOLES AT THE ENDS OF THE CRACK. REFER TO SRM 51-10-1. IF THE CRACK IS MORE THAN 15T FROM AN EDGE, IT IS OPTIONAL TO REMOVE THE CRACK TO A MAXIMUM DIAMETER OF 1.0 INCH AS SHOWN IN DETAIL VIII. IF YOU REMOVE THE CRACK, YOU MUST KEEP THE FASTENER EDGE MARGINS.

[H] REMOVE NICKS, GOUGES, SCRATCHES, AND CORROSION AS SHOWN IN DETAILS VII, IX, X, AND XI. IF THE DAMAGE IS MORE THAN 15T FROM AN EDGE, IT IS OPTIONAL TO REMOVE THE CRACK TO A MAXIMUM DIAMETER OF 1.0 INCH.

[I] DENTS ARE PERMITTED ON THE INNER SKIN, INNER SKIN DOUBLERS, ACCESS PANELS, AND COVER PLATES AS SHOWN IN DETAIL XII.

[J] THE AFT ENTRY DOOR WITH AN AIRSTAIR IS A CUSTOMER OPTION.

Passenger/Crew Entry Door Skin Allowable Damage
Figure 6 (Sheet 7)

BOEING PROPRIETARY - Copyright © - Unpublished Work - See title page for details.

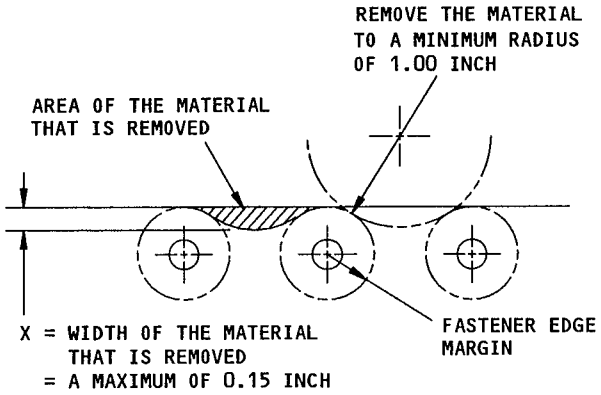

REMOVAL OF DAMAGED MATERIAL AT EDGES WHERE THE FASTENER EDGE MARGINS DO NOT HAVE AN OVERLAP

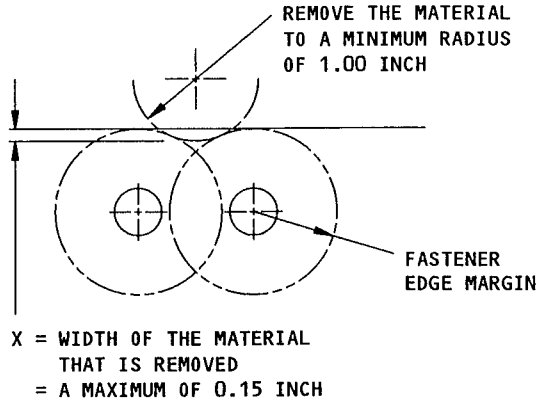

REMOVAL OF DAMAGED MATERIAL AT EDGES WHERE THE FASTENER EDGE MARGINS HAVE AN OVERLAP

DETAIL VI

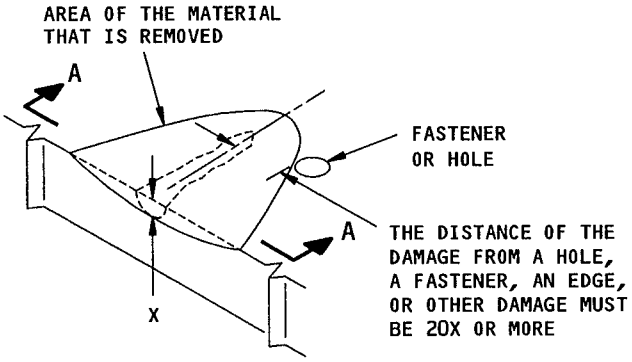

REMOVAL OF DAMAGED MATERIAL ON A SURFACE

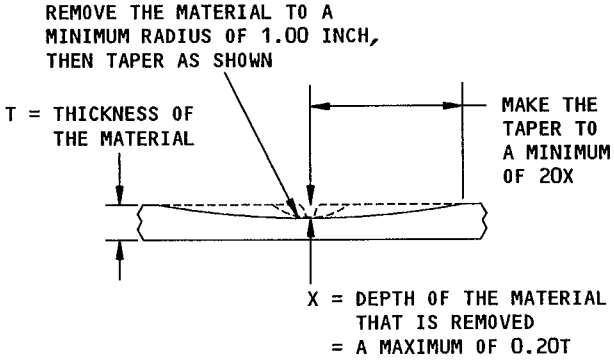

SECTION A-A

DETAIL VII

Passenger/Crew Entry Door Skin Allowable Damage
Figure 6 (Sheet 8)

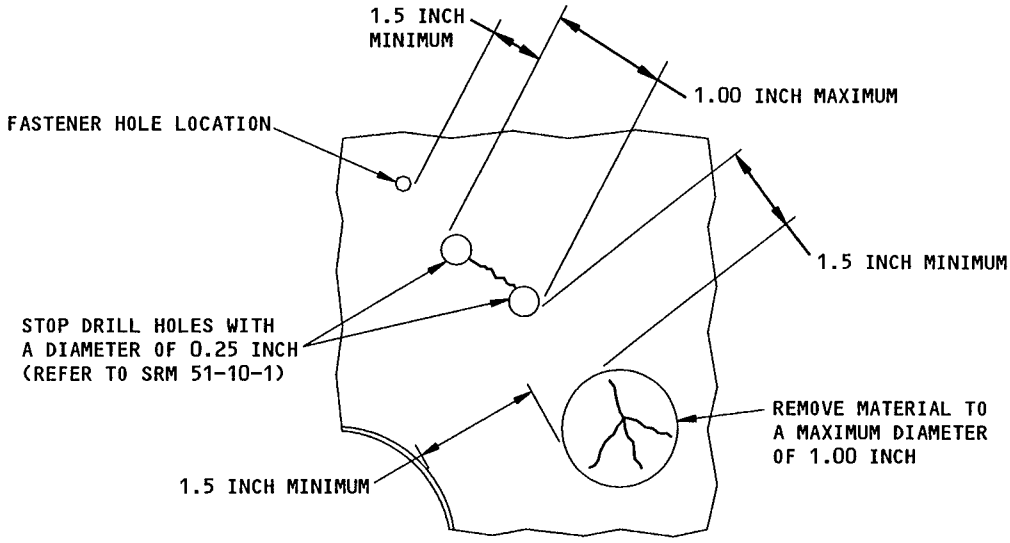

HOLES AND CRACKS THAT ARE PERMITTED
DETAIL VIII

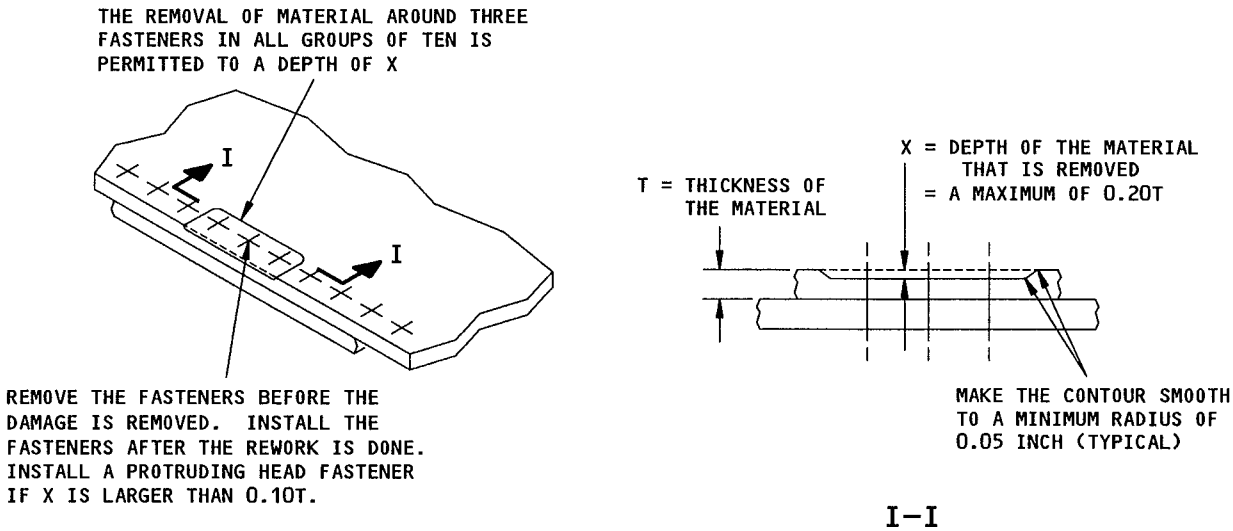

REMOVAL OF DAMAGE AROUND THE
FASTENERS ON AN EDGE OR A SURFACE
DETAIL IX

Passenger/Crew Entry Door Skin Allowable Damage
Figure 6 (Sheet 9)

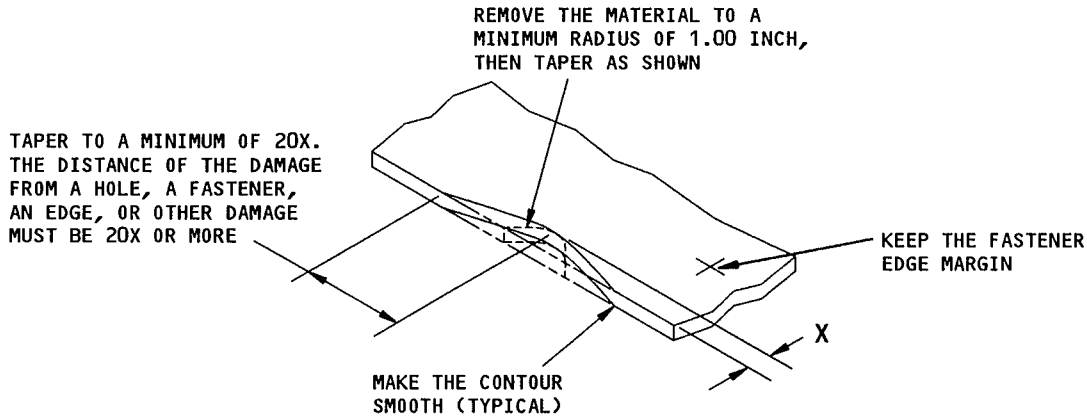

X = DEPTH OF THE MATERIAL THAT IS REMOVED
= A MAXIMUM OF 0.15 INCH

REMOVAL OF DAMAGED MATERIAL AT AN EDGE OF A METAL SKIN
DETAIL X

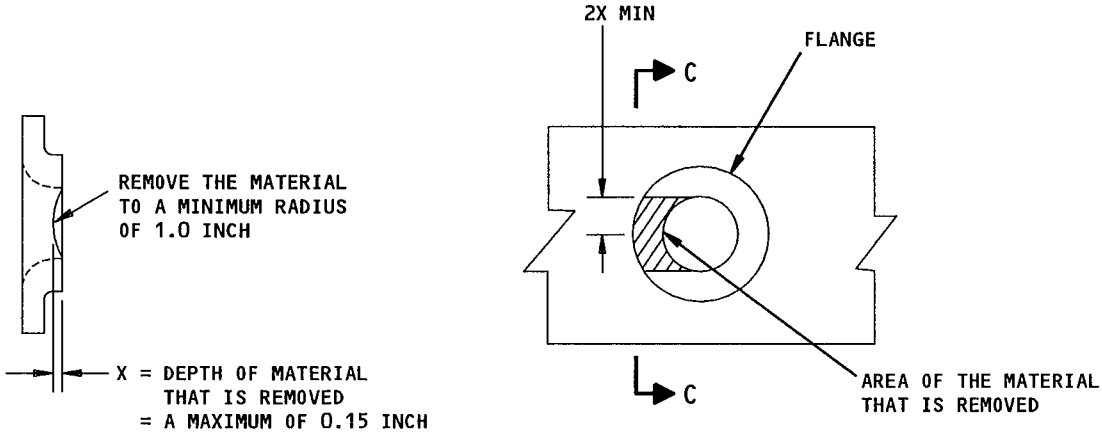

SECTION C-C

REMOVAL OF DAMAGED MATERIAL AT A FLANGED HOLE
DETAIL XI

Passenger/Crew Entry Door Skin Allowable Damage
Figure 6 (Sheet 10)

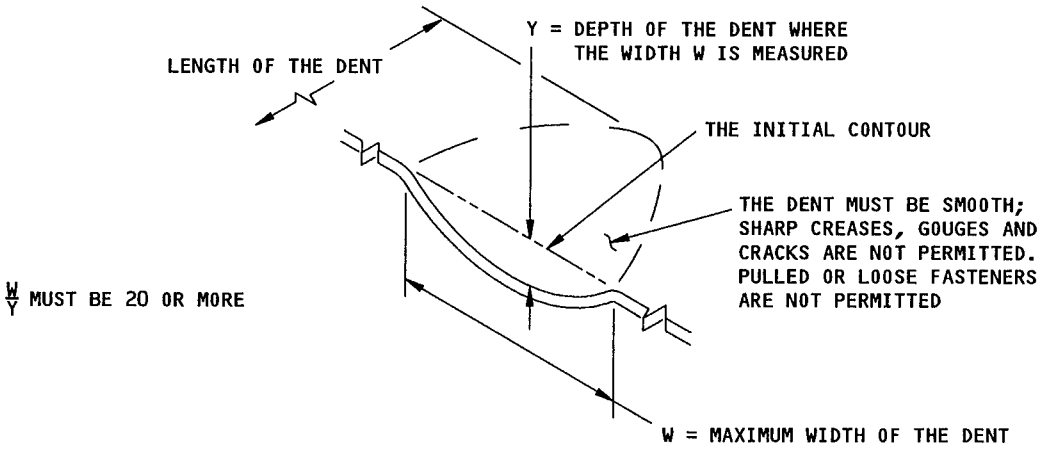

DENT THAT IS PERMITTED
DETAIL XII

Passenger/Crew Entry Door Skin Allowable Damage
Figure 6 (Sheet 11)

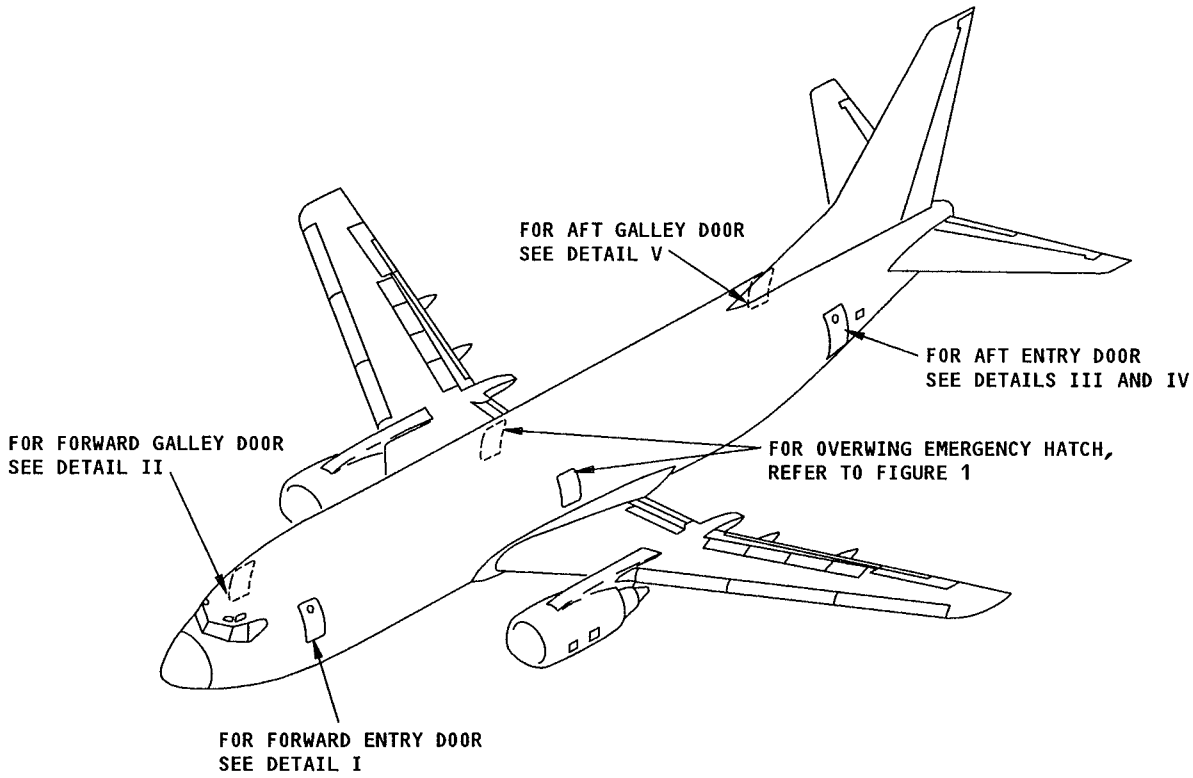

Passenger/Crew Entry Door Structure Allowable Damage
Figure 7 (Sheet 1)

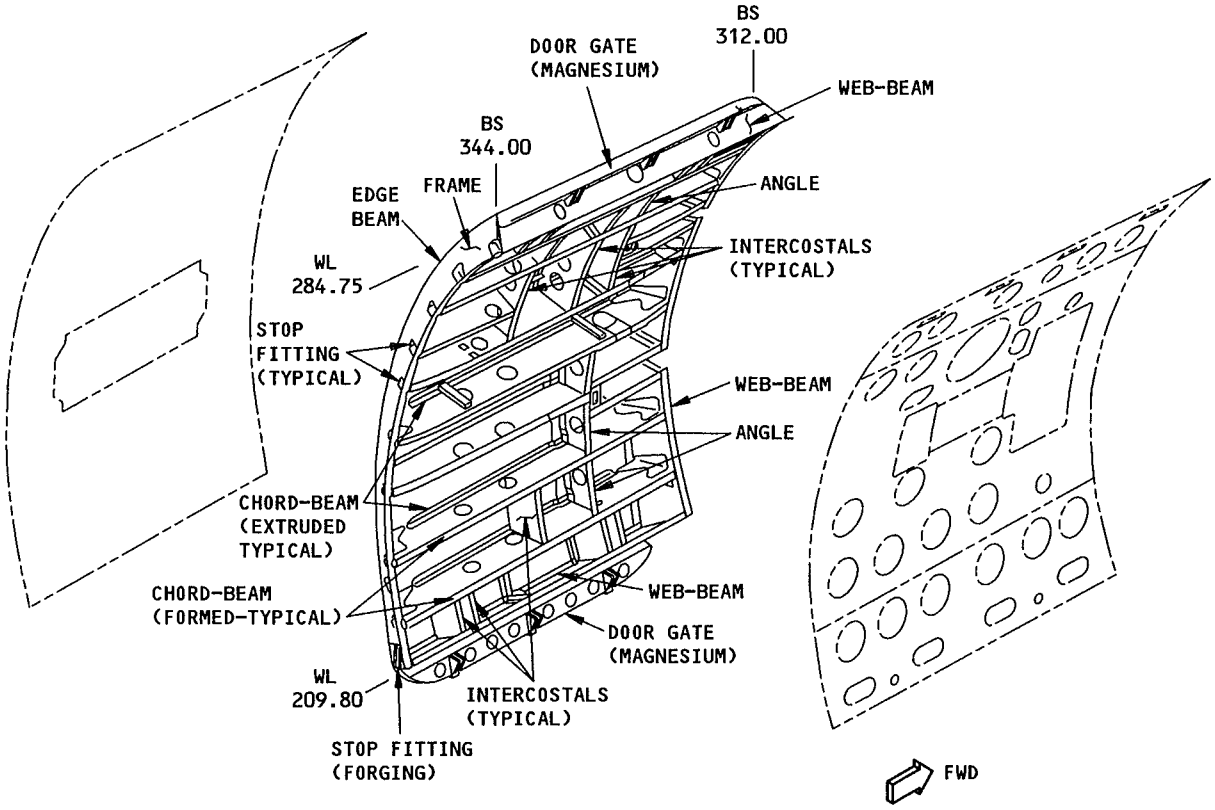

FWD ENTRY DOOR
DETAIL I

MATERIAL: ALUMINUM
EXCEPT AS NOTED

Passenger/Crew Entry Door Structure Allowable Damage
Figure 7 (Sheet 2)

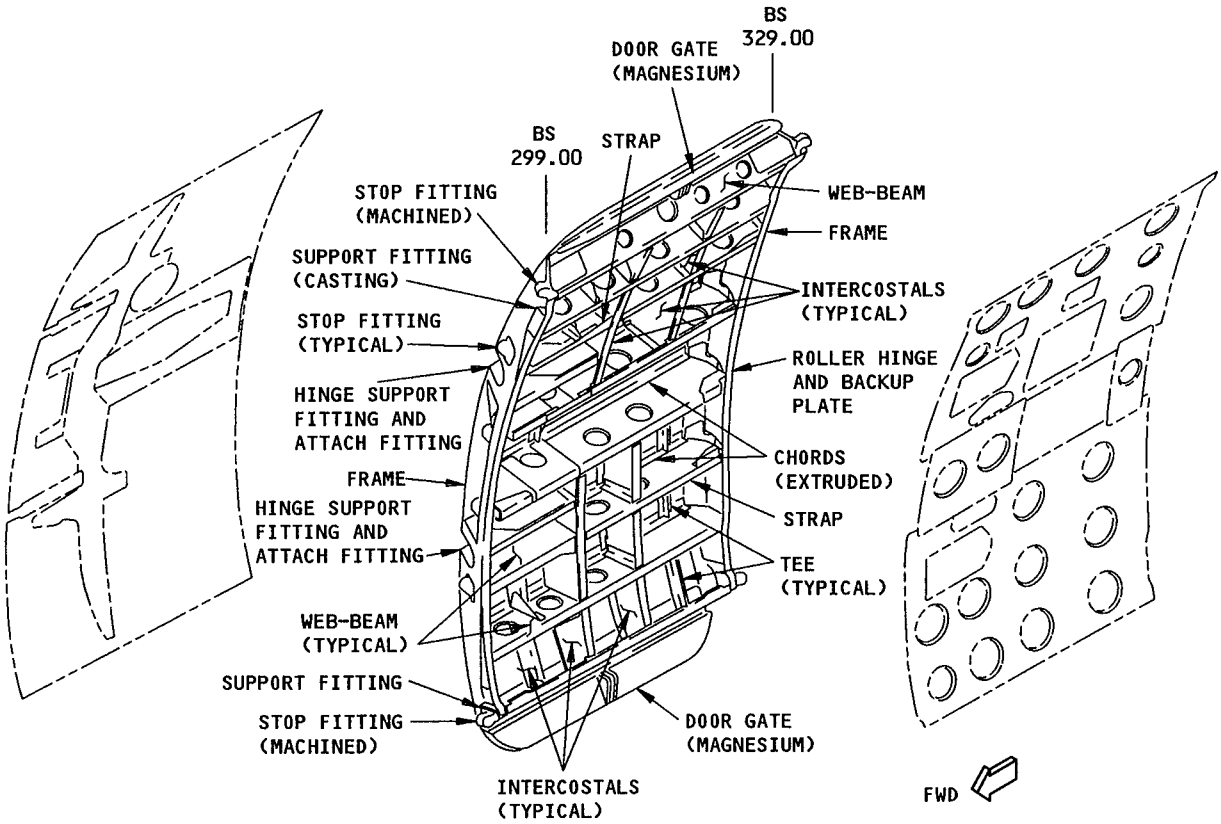

FWD GALLEY DOOR
DETAIL II

MATERIAL: ALUMINUM
EXCEPT AS NOTED

Passenger/Crew Entry Door Structure Allowable Damage
Figure 7 (Sheet 3)

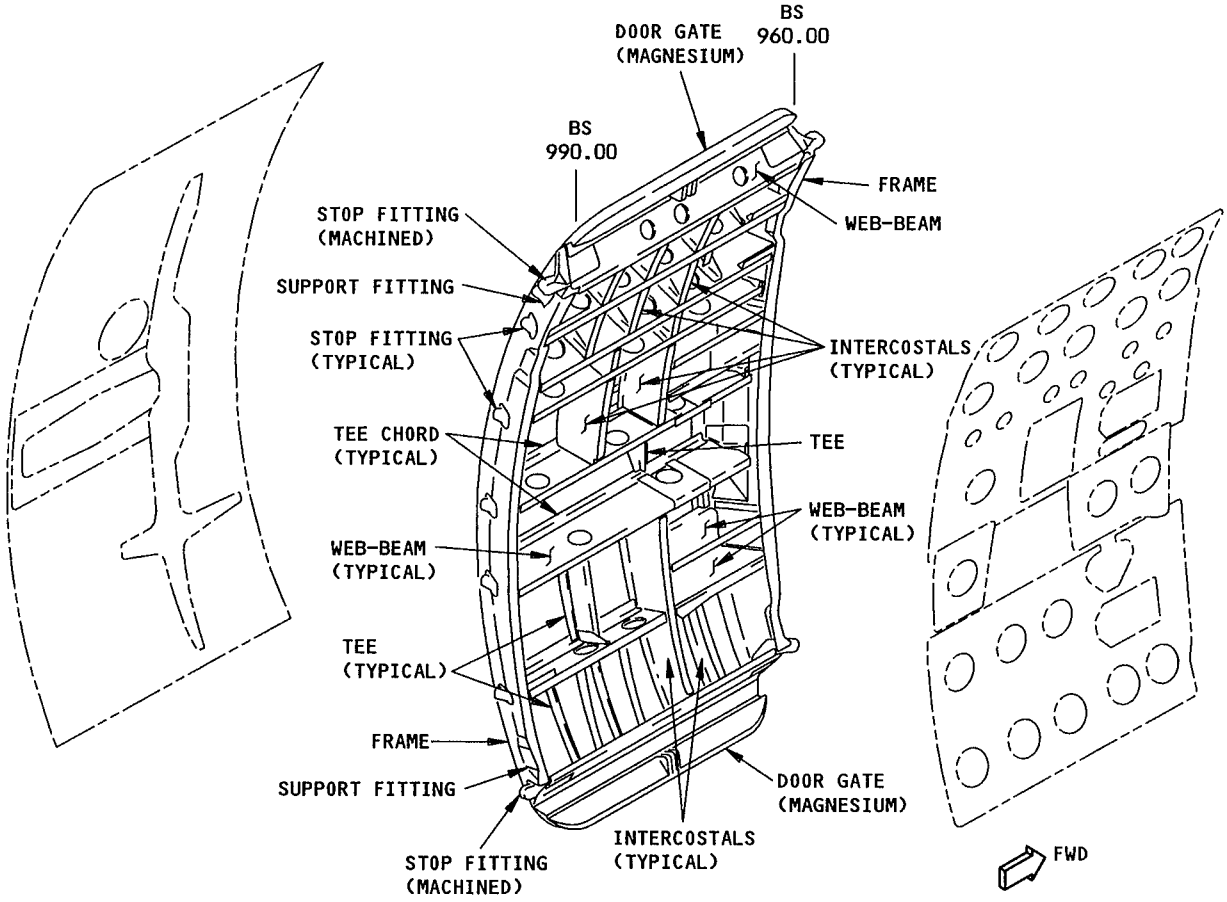

AFT ENTRY DOOR (WITHOUT AIRSTAIR)
DETAIL III

MATERIAL: ALUMINUM
EXCEPT AS NOTED

Passenger/Crew Entry Door Structure Allowable Damage
Figure 7 (Sheet 4)

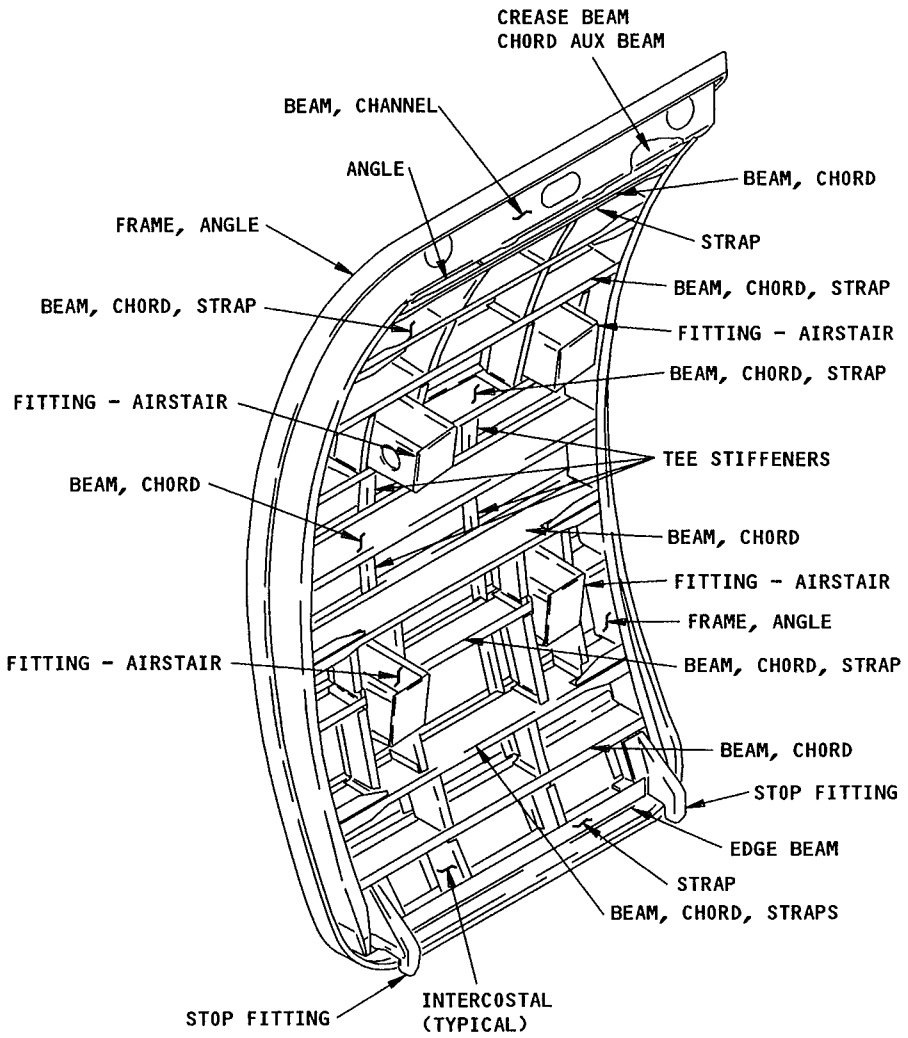

AFT ENTRY DOOR (WITH AIRSTAIR)
DETAIL IV

Passenger/Crew Entry Door Structure Allowable Damage
Figure 7 (Sheet 5)

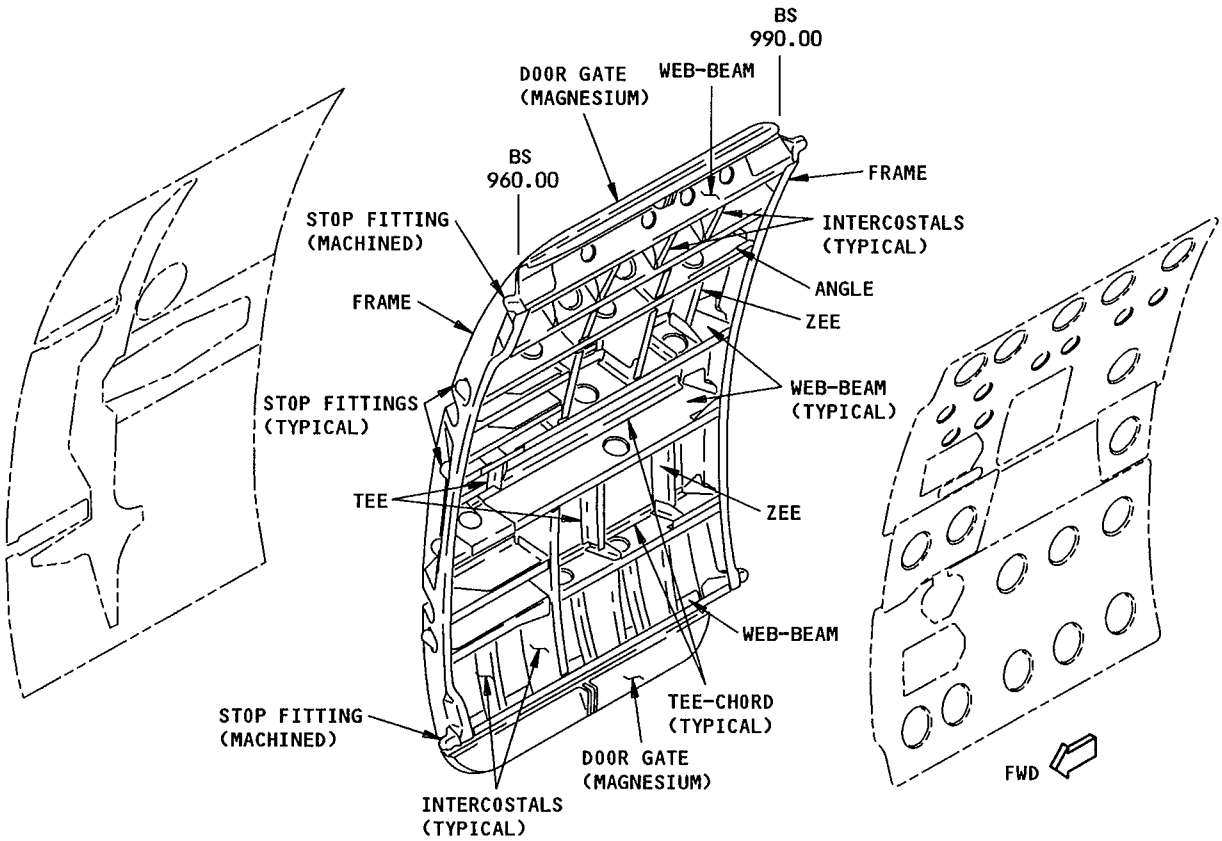

AFT GALLEY DOOR
DETAIL V

MATERIAL: ALUMINUM
EXCEPT AS NOTED

Passenger/Crew Entry Door Structure Allowable Damage
Figure 7 (Sheet 6)

DESCRIPTION	CRACKS	NICKS, GOUGES, SCRATCHES AND CORROSION	DENTS	HOLES AND PUNCTURES
EXTRUDED SECTION CHORDS, ANGLES, TEES, CHANNELS, AND ZEES	A	D	NOT PERMITTED	NOT PERMITTED
MACHINED CHORDS, ANGLES, TEES, CHANNELS, AND ZEES	A	D	NOT PERMITTED	G
FORMED CHORDS, ANGLES, TEES, CHANNELS, AND ZEES	B	E	H	G
FRAMES	C	F	H	G
WEBS	I	F	H	G
DOOR GATES	A	J L	NOT PERMITTED	NOT PERMITTED
STOP FITTINGS	NOT PERMITTED	K L	NOT PERMITTED	NOT PERMITTED
SUPPORT FITTINGS, ATTACH FITTINGS, HINGE SUPPORT FITTINGS, AND ROLLER FITTINGS	NOT PERMITTED	M	NOT PERMITTED	NOT PERMITTED

ALLOWABLE DAMAGE FOR DETAILS I,II,III,IV, AND V

NOTES

- THE ALLOWABLE DAMAGE LIMITS GIVEN IN THIS FIGURE WILL NOT HAVE AN EFFECT ON A STRUCTURALLY SIGNIFICANT ITEM (SSI) GIVEN IN SRM 51-00-4, FIG. 3. THUS, NO CHANGE TO THE SUPPLEMENTAL STRUCTURAL INSPECTION DOCUMENT (SSID) INSPECTION PROGRAM IS NECESSARY.
- THE ALLOWABLE DAMAGE GIVEN IN THIS SUBJECT DO NOT APPLY TO AREAS THAT ARE AFFECTED BY SERVICE BULLETINS.
- EXAMINE AND REMOVE THE DAMAGE. REFER TO SRM 51-10-1.
- APPLY A CHEMICAL CONVERSION COATING TO THE REWORKED ALUMINUM AND MAGNESIUM SURFACES. REFER TO SRM 51-10-2.
- REFINISH THE REWORKED SURFACES. REFER TO AMM 51-20.
- REFER TO SRM 51-10-6 FOR CORROSION REMOVAL PROCEDURES FOR ALUMINUM.
- REFER TO SRM 51-30-6 FOR FASTENER EDGE MARGINS.
- NICKS, GOUGES, AND SCRATCHES THAT DO NOT GO THROUGH THE CLAD SURFACE DO NOT REQUIRE REWORK OTHER THAN TO APPLY A PROTECTIVE FINISH. REFER TO SRM 51-10-1.

A REMOVE THE EDGE CRACKS AS SHOWN IN DETAILS XV AND XVI. OTHER CRACKS ARE NOT PERMITTED.

B REMOVE THE EDGE CRACKS AS SHOWN IN DETAILS VI AND XII. OTHER CRACKS ARE NOT PERMITTED.

C REMOVE THE EDGE CRACKS AS SHOWN IN DETAILS VI, VII, AND VIII. OTHER CRACKS ARE PERMITTED UP TO 1.0 INCH IN LENGTH. DRILL 0.25 INCH DIAMETER STOP HOLES AT THE ENDS OF THE CRACK. REFER TO SRM 51-10-1.

D REMOVE THE NICKS, GOUGES, SCRATCHES, AND CORROSION AS SHOWN IN DETAILS VI, IX, XI, AND XII.

E REMOVE THE NICKS, GOUGES, SCRATCHES, AND CORROSION AS SHOWN IN DETAILS VI, VIII, IX, AND XI.

F REMOVE NICKS, GOUGES, SCRATCHES, AND CORROSION AS SHOWN IN DETAILS VI, VII, VIII, IX, AND XI.

Passenger/Crew Entry Door Structure Allowable Damage
Figure 7 (Sheet 7)

BOEING PROPRIETARY - Copyright © - Unpublished Work - See title page for details.

NOTES (CONTINUED)

G HOLES ARE PERMITTED TO A MAXIMUM DIAMETER OF 0.25 INCH IF:

- THE HOLE DOES NOT GO INTO A RADIUS AND
- THE HOLE IS A MINIMUM OF 1.0 INCH AWAY FROM OTHER HOLES OR DAMAGE AND
- THE HOLE IS A MINIMUM OF 1.5D AWAY FROM A MATERIAL EDGE.

REAM THE HOLE 1/32 INCH DIAMETER LARGER TO A MAXIMUM OF 0.25 INCH DIAMETER. FILL THE HOLE WITH A RIVET MADE OF 2117-T3 OR 2117-T4 ALUMINUM ALLOY. INSTALL THE RIVET WET WITH BMS 5-95 SEALANT.

H DENTS ARE PERMITTED AS SHOWN IN DETAIL X.

I REMOVE THE EDGE CRACKS AS SHOWN IN DETAILS VI AND VII. OTHER CRACKS ARE NOT PERMITTED.

J REMOVE THE NICKS, GOUGES, SCRATCHES, AND CORROSION ON AN EDGE AS SHOWN IN DETAILS VI AND XII. REMOVE OTHER NICKS, GOUGES, SCRATCHES, AND CORROSION AS SHOWN IN DETAIL IX.

K REMOVE NICKS, GOUGES, SCRATCHES, AND CORROSION AS SHOWN IN DETAIL XIV.

L REMOVE THE DAMAGE ON A LUG AS SHOWN IN DETAIL XIII. THE DAMAGE MUST BE MORE THAN 0.02 INCH AWAY FROM A BUSHING.

M REMOVE NICKS, GOUGES, SCRATCHES, AND CORROSION AS SHOWN IN DETAIL XIV. DO NOT REMOVE DAMAGE ON AN AREA THAT HAS SERRATIONS.

Passenger/Crew Entry Door Structure Allowable Damage
Figure 7 (Sheet 8)

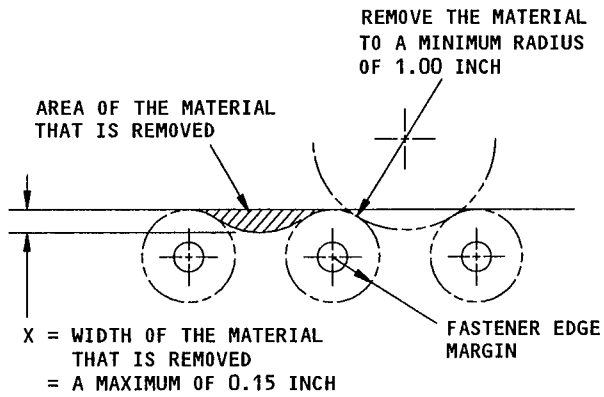

REMOVAL OF DAMAGED MATERIAL AT EDGES WHERE THE FASTENER EDGE MARGINS DO NOT HAVE AN OVERLAP

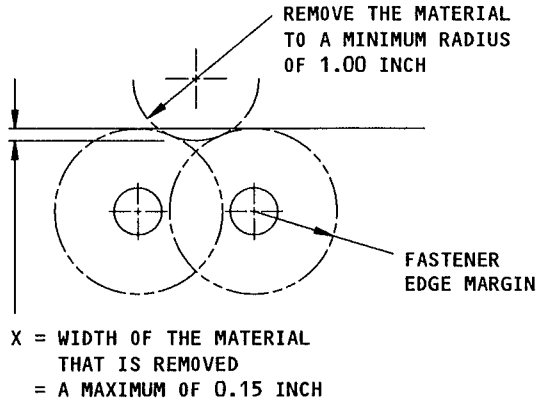

REMOVAL OF DAMAGED MATERIAL AT EDGES WHERE THE FASTENER EDGE MARGINS HAVE AN OVERLAP

DETAIL VI

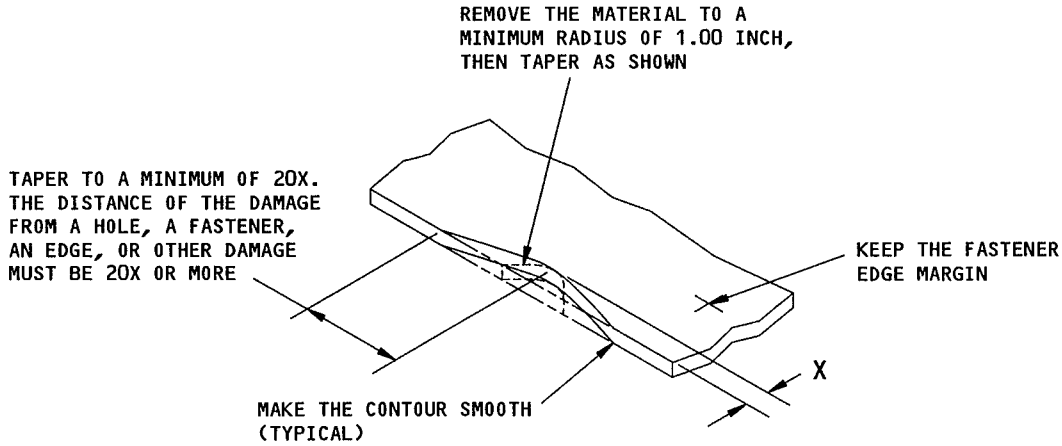

X = WIDTH OF THE MATERIAL THAT IS REMOVED
= A MAXIMUM OF 0.15 INCH

REMOVAL OF DAMAGED MATERIAL ON AN EDGE
DETAIL VII

Passenger/Crew Entry Door Structure Allowable Damage
Figure 7 (Sheet 9)

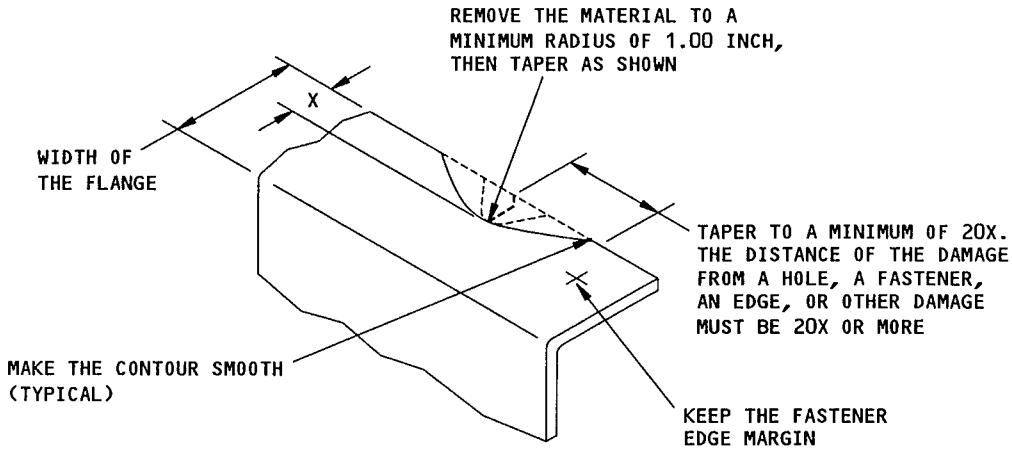

X = DEPTH OF THE MATERIAL THAT IS REMOVED
= A MAXIMUM OF 0.15 INCH

REMOVAL OF DAMAGED MATERIAL ON AN EDGE

DETAIL VIII

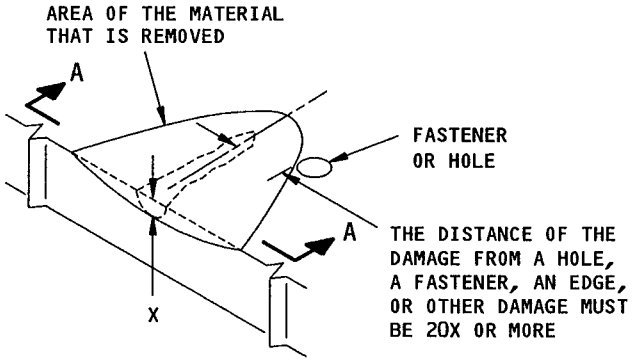

REMOVAL OF DAMAGED MATERIAL ON A SURFACE

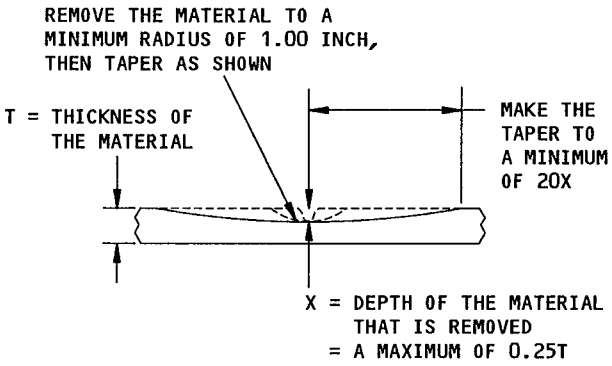

SECTION A-A

DETAIL IX

Passenger/Crew Entry Door Structure Allowable Damage
Figure 7 (Sheet 10)

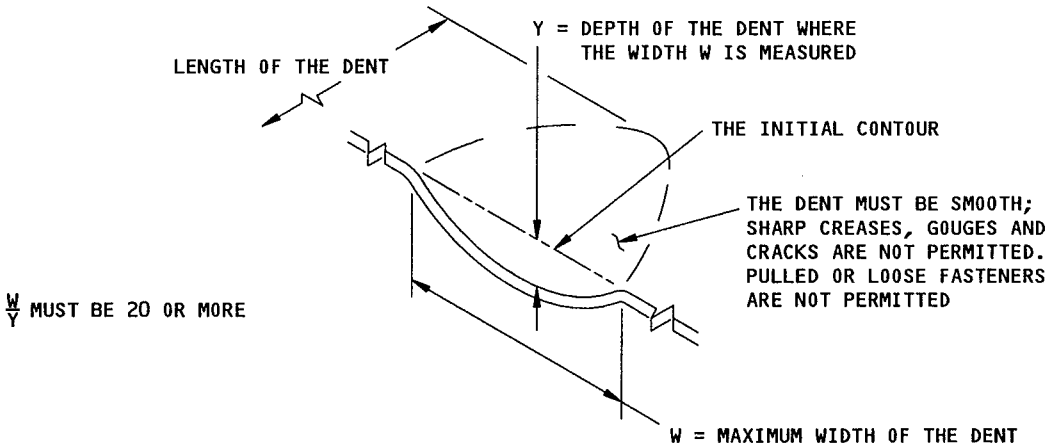

DENT THAT IS PERMITTED

DETAIL X

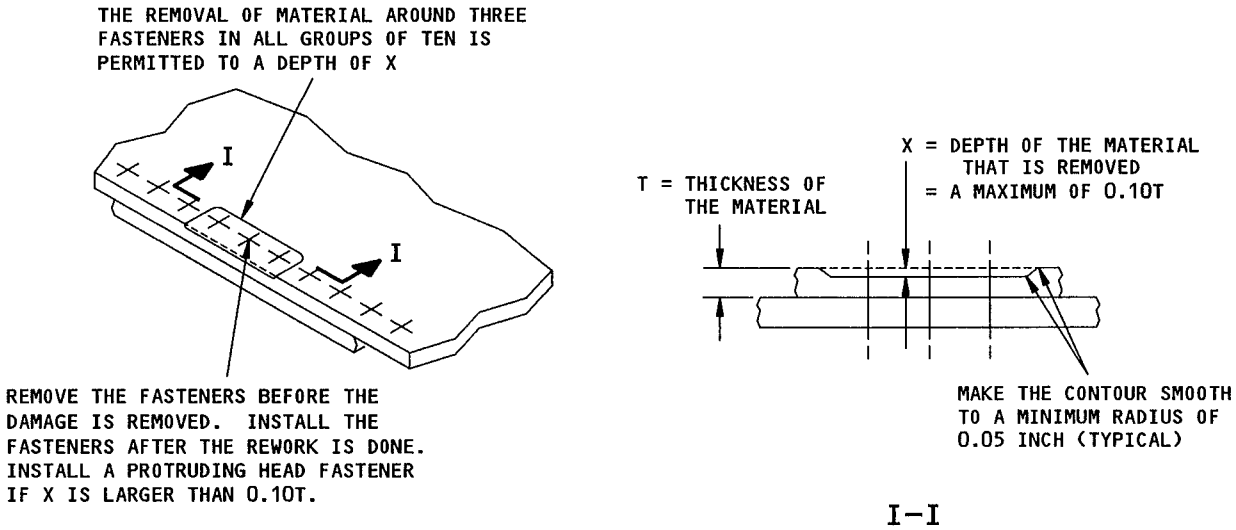

I–I

REMOVAL OF DAMAGE AROUND THE FASTENERS ON AN EDGE OR A SURFACE

DETAIL XI

Passenger/Crew Entry Door Structure Allowable Damage
Figure 7 (Sheet 11)

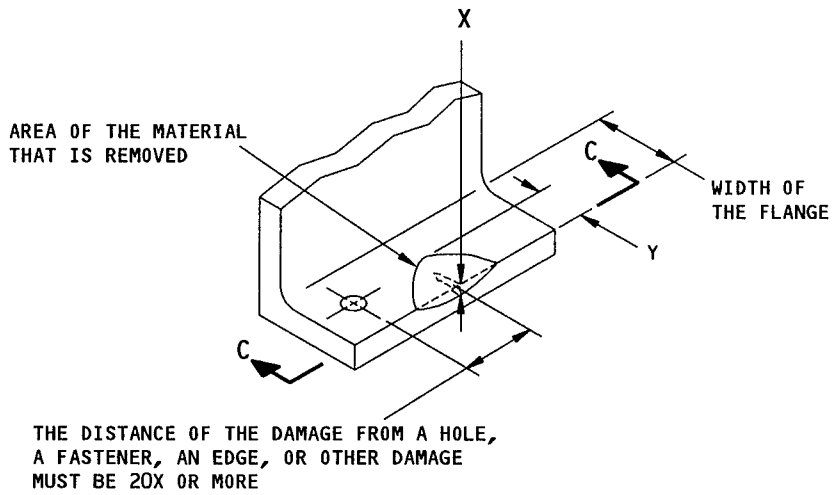

Y = WIDTH OF THE MATERIAL THAT IS REMOVED
= A MAXIMUM OF 10 PERCENT OF THE WIDTH OF THE FLANGE

REMOVAL OF DAMAGED MATERIAL
ON A SURFACE AT AN EDGE

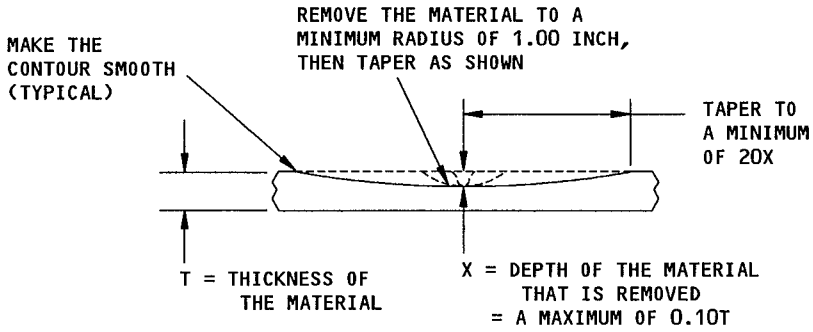

C–C

DETAIL XII

Passenger/Crew Entry Door Structure Allowable Damage
Figure 7 (Sheet 12)

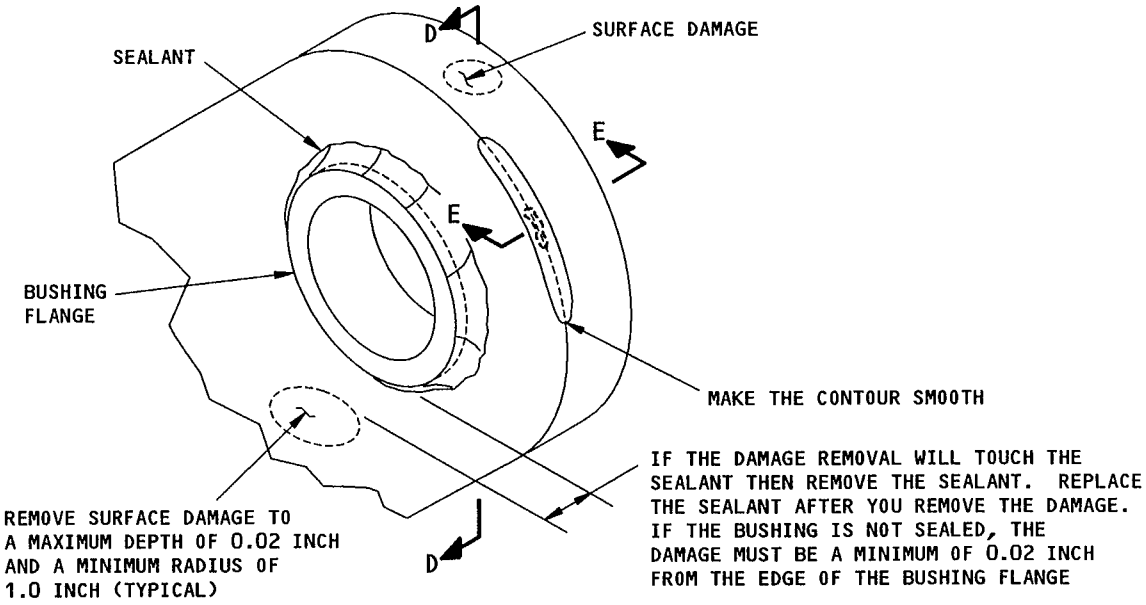

NOTE: DAMAGED SEALANT IS NOT PERMITTED. IF THE SEALANT IS DAMAGED, LOOK FOR MIGRATION OR ROTATION OF THE BUSHING. IF THERE IS NO MIGRATION, ROTATION, OR CORROSION, REMOVE THE DAMAGED SEALANT AND APPLY A NEW FILLET SEAL.

REMOVAL OF SURFACE AND EDGE DAMAGE FROM A LUG THAT HAS A BUSHING

DETAIL XIII

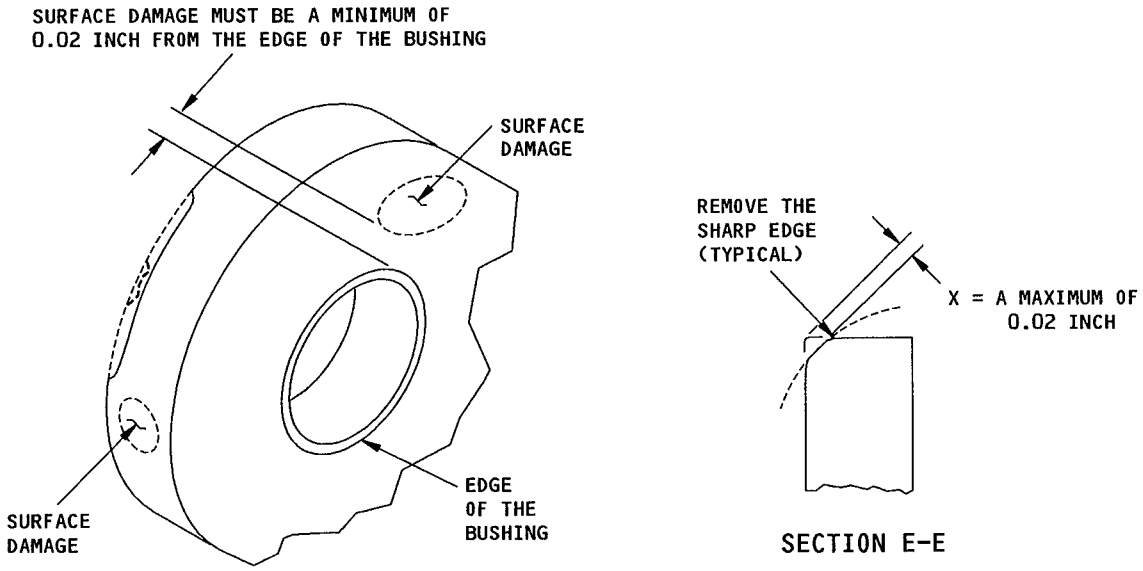

VIEW D-D

SECTION E-E

Passenger/Crew Entry Door Structure Allowable Damage
Figure 7 (Sheet 13)

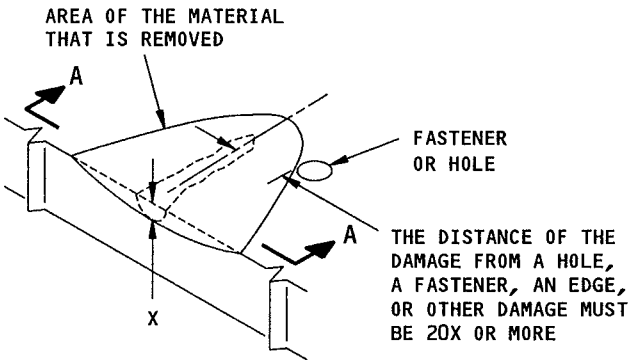

REMOVAL OF DAMAGED MATERIAL
ON A SURFACE

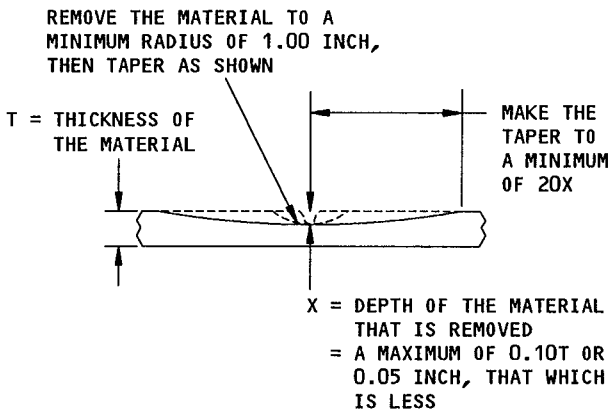

SECTION A-A

DETAIL XIV

Passenger/Crew Entry Door Structure Allowable Damage
Figure 7 (Sheet 14)

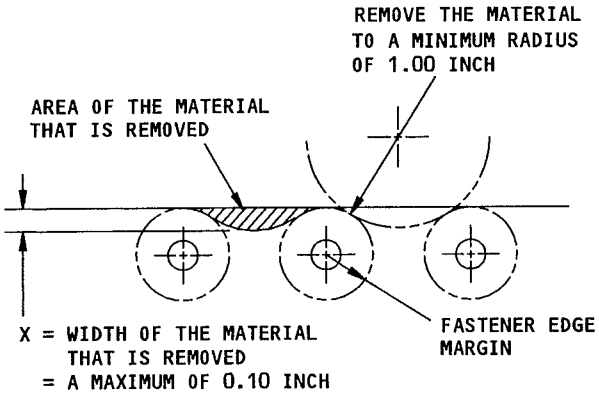

REMOVAL OF DAMAGED MATERIAL AT EDGES WHERE THE FASTENER EDGE MARGINS DO NOT HAVE AN OVERLAP

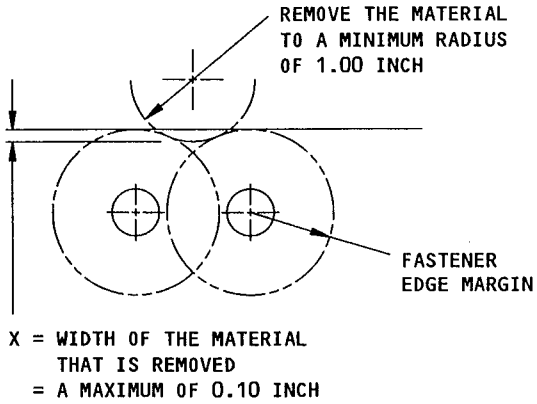

REMOVAL OF DAMAGED MATERIAL AT EDGES WHERE THE FASTENER EDGE MARGINS HAVE AN OVERLAP

DETAIL XV

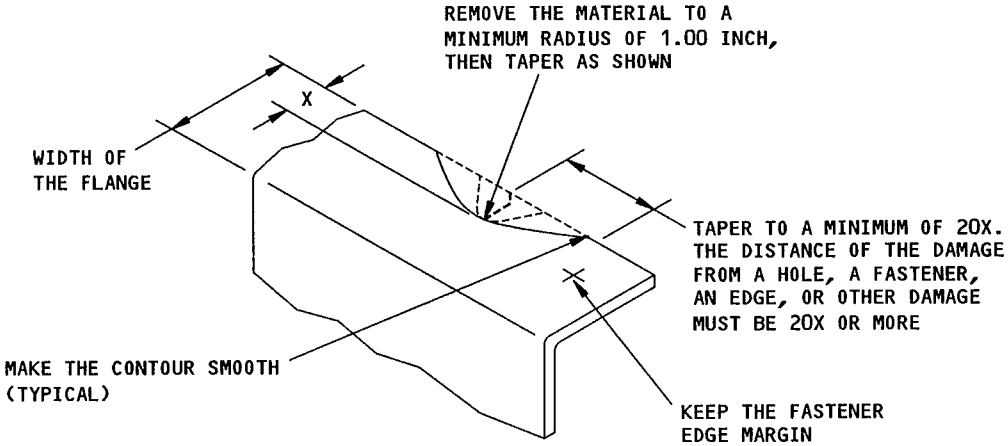

X = DEPTH OF THE MATERIAL THAT IS REMOVED
= A MAXIMUM OF 0.10 INCH

REMOVAL OF DAMAGED MATERIAL ON AN EDGE

DETAIL XVI

Passenger/Crew Entry Door Structure Allowable Damage
Figure 7 (Sheet 15)

F12466

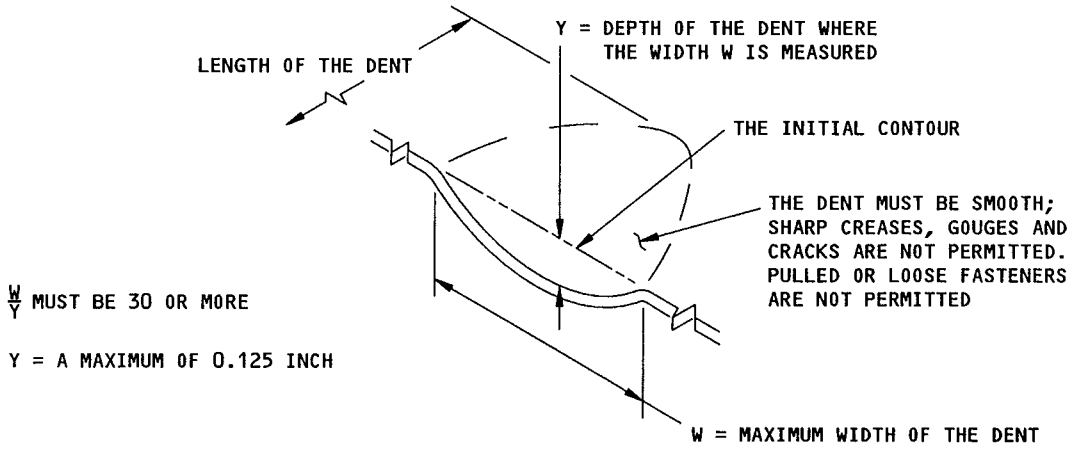

DENT THAT IS PERMITTED

DETAIL I

NOTES

- THE ALLOWABLE DAMAGE DATA IN THIS FIGURE IS APPLICABLE TO DENTS IN THE OUTER SKIN OF PASSENGER AND CREW ENTRY DOORS.
- THIS ALLOWABLE DAMAGE DATA HAS FAA APPROVAL IF THE INSPECTIONS GIVEN IN THIS FIGURE ARE COMPLETED AT THE SPECIFIED TIMES.
- INSPECTIONS ARE NOT NECESSARY FOR DENTS THAT AGREE WITH THE ALLOWABLE DAMAGE SHOWN IN DETAIL I.
- DENTS ARE PERMITTED AS SHOWN IN DETAIL I. IF THE DENTS DO NOT AGREE WITH THE LIMITS SHOWN IN DETAIL I AND IT IS NOT POSSIBLE TO IMMEDIATELY REPAIR THE DENTS, THE AIRPLANE IS PERMITTED TO OPERATE IF YOU:
  - MAKE SURE THERE ARE NO SHEARED OR LOOSE FASTENERS ADJACENT TO THE DENT
  - MAKE SURE THERE ARE NO ELONGATED FASTENER HOLES ADJACENT TO THE DENT
  - MAKE SURE THAT YOU CAN INSPECT THE DENT. DO NOT FILL THE DENT.
  - MAKE SURE THE AERODYNAMIC SMOOTHNESS IS SATISFACTORY. REFER TO SRM 51-70.
  - MAKE A CAREFUL VISUAL INSPECTION OF THE DENT EVERY C-CHECK TO MAKE SURE THERE ARE NO CRACKS OR CORROSION. REFER TO FIGURE 6 IF YOU FIND CRACKS OR CORROSION.

Passenger/Crew Entry Door Allowable Damage For Dents In the Outer Skin
Figure 8

SERVICE BULLETIN REPAIRS

The following service bulletins contain repairs which are available for use where specific damage has been encountered. Usually, the service bulletin also covers preventive modification data which operators are encouraged to use to eliminate the need for repair.

DAMAGED AREA	CUM LINE NUMBER EFFECTIVITY [A]	SB NUMBER
FORWARD ENTRY DOOR AND FORWARD GALLEY DOOR UPPER AND LOWER HINGE CUTOUTS	1 THRU 1675	737-52-1096

[A] FOR AIRPLANES ON WHICH PREVENTIVE MODIFICATION HAS NOT BEEN ACCOMPLISHED.

BOEING PROPRIETARY - Copyright © - Unpublished Work - See title page for details.

REPAIR INSTRUCTIONS

1. Remove door lining and sufficient fasteners from door inner skin to gain access to damaged area.
2. Round out and deburr the damaged hole to 1.0 inch diameter max. The center of the repair hole must not be less than 3 times the hole diameter from the edge of any cutout.
3. Make the repair parts.
4. Assemble the repair parts and drill the fastener holes.
5. Remove the repair parts.
6. Break sharp edges of original and repair parts 0.015 R to 0.030 R.
7. Remove all nicks, scratches, burrs, sharp edges and corners from original and repair parts.
8. Apply a protective alodine coating to the repair parts and the cut edges of the original parts per 51-10-2.
9. Prepare the faying surfaces of the repair parts and door skin and bond per 51-40-5.
10. Install fasteners wet with BMS 5-95 sealant within the pot life of the bonding adhesive.
11. Seal repair area per 53-30-4. Fill gap between the skin and the repair parts with BMS 5-79 aerodynamic smoother.
12. Replace door inner skin fasteners and lining.
13. Restore original finish per 51-21 of the 737 Maintenance Manual.

NOTES

- THIS IS A CATEGORY A REPAIR. THE INSPECTIONS GIVEN IN THE BASELINE ZONAL INSPECTION (BZI) ARE SUFFICIENT TO MAINTAIN THE DAMAGE TOLERANCE OF THE INITIAL STRUCTURE WITH THIS REPAIR INSTALLED. REFER TO 51-00-6 FOR REPAIR CATEGORIES, BZI DEFINITION AND REPAIR ASSESSMENT INFORMATION.
- THIS REPAIR WILL NOT HAVE AN EFFECT ON THE STRUCTURAL SIGNIFICANT ITEMS (SSI) GIVEN IN SRM 51-00-4, FIGURE 3.
- REFER TO THE FOLLOWING WHEN USING THIS REPAIR:
  - SRM 51-10-1 FOR DAMAGE CLASSIFICATION
  - SRM 51-10-2 FOR PROTECTIVE TREATMENT OF METAL
  - SRM 51-20-4 FOR SEALING OF REPAIRS
  - AMM 51-21 FOR INTERIOR AND EXTERIOR FINISHES
  - SRM 51-30 FOR FASTENER CODE, REMOVAL, INSTALLATION, HOLE SIZES AND EDGE MARGINS
  - SRM 51-70 FOR AERODYNAMIC SMOOTHNESS REQUIREMENTS

[A] MAKE REPAIR PARTS FROM CLAD 2024-T3 ALUMINUM

FASTENER SYMBOLS

REPAIR FASTENER LOCATIONS. INSTALL BACR15BB( )D( ) RIVET IF DOOR SKIN GAGE IS 0.040. OTHERWISE, INSTALL BACR15CE( )D( ) RIVET. SEE TABLE I FOR QUANTITY AND DIAMETER OF REPAIR FASTENERS

Typical Small Hole Flush Repair on Aluminum Door Skin
of 0.040 Gage or Thicker
Figure 1 (Sheet 1)

BOEING PROPRIETARY - Copyright © - Unpublished Work - See title page for details.

SKIN GAGE	REPAIR PART GAGES [A]		A INCHES	B INCHES	C INCHES	INNER RIVET CIRCLE		OUTER RIVET CIRCLE	
	PART 1	PART 2				QTY	DIA	QTY	DIA
0.040	0.040	0.045	3.80	1.70	3.10	7	5/32	14	5/32
0.045	0.045	0.050	3.80	1.70	3.10	7	5/32	14	5/32
0.050	0.050	0.056	4.30	1.80	3.50	8	5/32	15	5/32
0.056	0.056	0.063	4.30	1.80	3.50	6	3/16	13	3/16
0.063	0.063	0.071	4.30	1.80	3.50	6	3/16	13	3/16
0.071	0.071	0.080	5.25	2.00	4.25	7	3/16	14	3/16

TABLE I

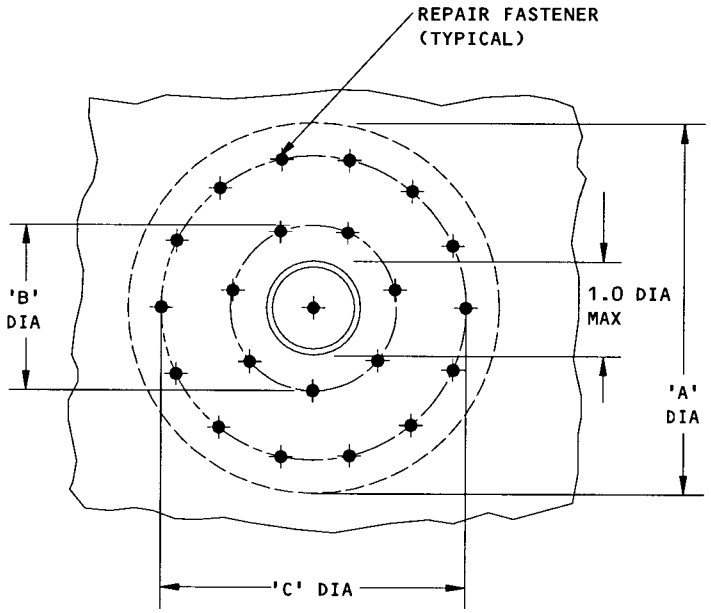

EXTERIOR VIEW

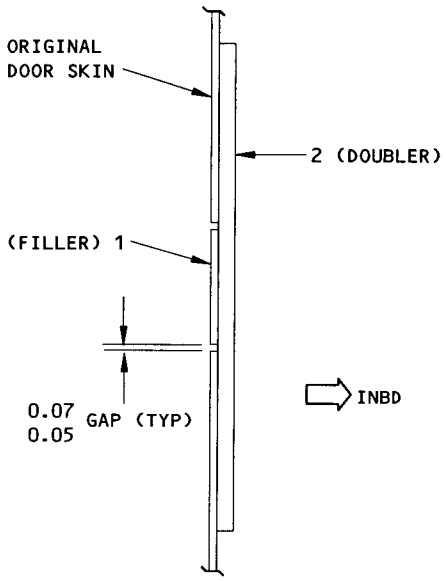

SECTION THROUGH REPAIR

Typical Small Hole Flush Repair on Aluminum Door Skin
of 0.040 Gage or Thicker
Figure 1 (Sheet 2)

BOEING PROPRIETARY - Copyright © - Unpublished Work - See title page for details.

APPLICABILITY

THIS REPAIR IS APPLICABLE TO PASSENGER/CREW DOORS, GALLEY DOORS, EMERGENCY EXITS AND CARGO DOORS, WHICH HAVE A CONSTANT THICKNESS OF 0.056 INCH MINIMUM.

FOR THINNER SKINS, USE AN EXTERNAL DOUBLER. REFER TO SRM 52-00-3, FIGURE 6.

REPAIR INSTRUCTIONS

1. Remove door lining and sufficient fasteners from door inner skin as necessary to gain access to damaged area.
2. Return all indented or projecting skin to contour.
3. Make the cutout as shown in Detail I.
4. Make the repair parts given in Table I. Make the surface contour of the repair parts the same as the surface contour of the door skin.
5. Assemble the repair parts. See Detail I.
6. Drill the fastener holes.
7. Disassemble the repair parts.
8. Remove the nicks, scratches, gouges, burrs, and sharp edges from the repair parts and the initial skin.
9. Apply a chemical conversion coating to the repair parts and to the cut edges of the initial skin. Refer to SRM 51-10-2.
10. Apply one layer of BMS 10-79, Type II or III primer to the repair parts and the cut edges of the skin. Refer to SRM 51-10-2.
11. Install the repair parts with BMS 5-95 sealant between the mating surfaces. Refer to SRM 51-20-4.
12. Install the fasteners given in Table II.
13. Apply aerodynamic smoother to the gap between the Part 2 filler and the adjacent skin. Refer to SRM 51-70.
14. Apply the finish to the repair area. Refer to AMM 51-21.
15. Apply corrosion inhibiting compound on the internal surfaces. Refer to SRM 51-10-2.

NOTES

- A DAMAGE TOLERANCE ASSESSMENT IS NECESSARY FOR THE MAIN CARGO DOOR AND THE LOWER LOBE CARGO DOORS. FOR THESE DOORS, THIS IS A CATEGORY A REPAIR. THE INSPECTIONS GIVEN IN THE BASELINE ZONAL INSPECTION (BZI) ARE SUFFICIENT TO KEEP THE INITIAL STRUCTURE DAMAGE TOLERANT WITH THIS REPAIR INSTALLED. REFER TO SRM 51-00-6 FOR REPAIR CATEGORIES, BZI DEFINITION AND REPAIR ASSESSMENT DATA.

  A DAMAGE TOLERANCE ASSESSMENT IS NOT NECESSARY FOR OTHER DOORS. THUS, THEY ARE NOT INCLUDED IN THE REPAIR ASSESSMENT PROGRAM.
- THIS REPAIR, WHEN INSTALLED ON THE LOWER LOBE CARGO DOORS, WILL HAVE AN EFFECT ON THE STRUCTURAL SIGNIFICANT ITEM (SSI) NUMBER F-1, BUT THE INSPECTIONS THAT ARE NECESSARY FOR F-1 ARE STILL APPLICABLE. THUS, NO NEW INSPECTION ALTERNATIVES ARE NECESSARY FOR THIS REPAIR. DO THE INSPECTION FOR F-1, IF NECESSARY, AT THE SUBSEQUENT SUPPLEMENTAL STRUCTURAL INSPECTION DOCUMENT (SSID) INSPECTION ON THIS DOOR. THIS REPAIR WILL NOT HAVE AN EFFECT ON AN SSI WHEN INSTALLED ON THE OTHER DOORS. REFER TO SRM 51-00-4, FIG. 3 FOR THE APPLICABLE SSI DATA.
- WHEN YOU USE THIS REPAIR REFER TO:
  - AMM 51-21 FOR INTERIOR AND EXTERIOR FINISHES
  - SOPM 20-44-04 FOR APPLICATION OF CORROSION RESISTANT PRIMER
  - SRM 51-00-6 FOR REPAIR CATEGORIES DEFINITIONS AND REPAIR ASSESSMENT PROGRAM INFORMATION
  - SRM 51-10-1 FOR DAMAGE CLASSIFICATION
  - SRM 51-10-2 FOR PROTECTIVE TREATMENT OF METALS
  - SRM 51-20-4 FOR REPAIR SEALING
  - SRM 51-30 FOR FASTENER CODE, REMOVAL AND INSTALLATION, HOLE SIZES, EDGE MARGINS AND SUBSTITUTION
  - SRM 51-70 FOR AERODYNAMIC SMOOTHNESS.

Door Skin - Flush Repair Between Beams
Figure 2 (Sheet 1)

NOTES (CONT)

[A] SAME MATERIAL AND HEAT TREAT, BUT ONE GAGE THICKER THAN THE INITIAL SKIN. REFER TO SRM 51-20-1, FIG. 2, FOR LIST OF AVAILABLE SHEET METAL GAGES

[B] SAME MATERIAL AND GAGE AS THE INITIAL SKIN

[C] WHEN MS20426 RIVETS ARE USED, THE COUNTERSINK DEPTH SHOULD BE THE SAME AS FOR A BACR15CE RIVET. MICROSHAVE THE RIVET HEAD AFTER INSTALLATION.

FASTENER SYMBOLS

REPAIR FASTENER LOCATIONS. SEE TABLE II FOR FASTENER TYPE.

REPAIR MATERIAL			
PART		QTY	MATERIAL
[1]	DOUBLER	1	[A]
[2]	FILLER	1	[B]

TABLE I

REPAIR FASTENERS	
RECOMMENDED	ALTERNATIVE
BACR15CE5D	MS20426D5 [C]

TABLE II

Door Skin - Flush Repair Between Beams
Figure 2 (Sheet 2)

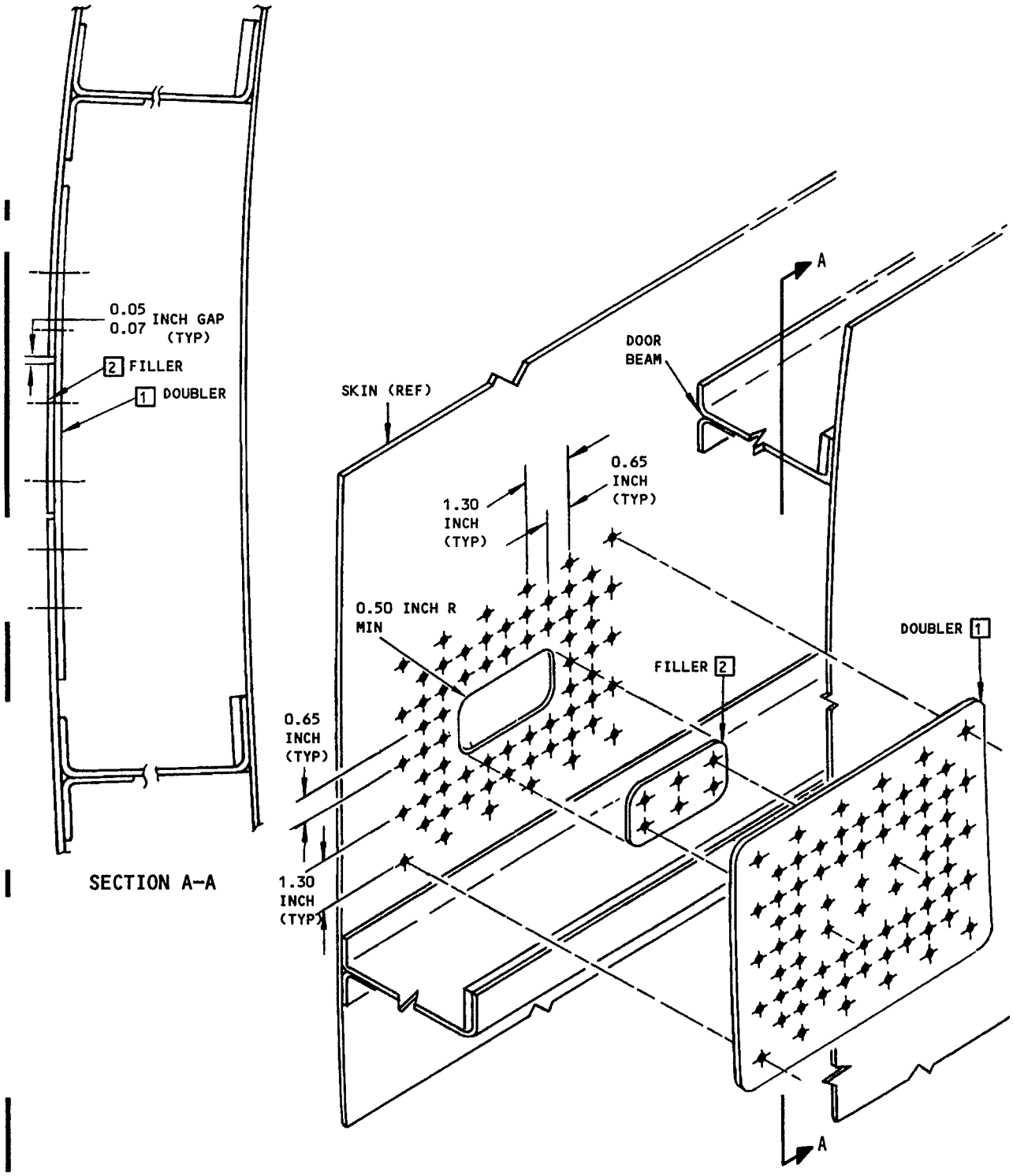

Door Skin - Flush Repair Between Beams
Figure 2 (Sheet 3)

APPLICABILITY
THIS REPAIR IS APPLICABLE TO PASSENGER/CREW DOORS, GALLEY DOORS, EMERGENCY EXITS AND LOWER CARGO DOORS, WHICH HAVE A CONSTANT THICKNESS OF 0.056 MINIMUM. FOR THINNER SKINS, USE AN EXTERNAL DOUBLER.

REPAIR INSTRUCTIONS

1. Remove door lining and sufficient fasteners from door inner skin to gain access to damaged area.
2. Return all indented or protruding skin to contour.
3. Trim the damaged skin to form a rectangular shape. Make cutout parallel to a beam centerline and radius all corners .50 inch. Clean up all edges and remove all burrs, nicks and scratches.
4. Fabricate repair parts [1], [2], and [3] and make a preliminary installation for fit and to check fastener locations.
5. Cut away beam flanges next to damaged skin to provide adequate clearance for installation of doubler [1].
6. Alodine the entire surfaces and fastener holes of repair parts and all trimmed surfaces (including holes in original structure) from which original finish has been removed per 51-10-2.
7. Install repair parts [1], [2], and [3] and fasteners wet with BMS 5-95 faying surface finish.
8. Install angles [3] using specified fasteners.
9. Apply aerodynamic smoother per 51-70.
10. Replace door inner skin fasteners and lining.
11. Refinish per 51-21-0 of the 737 Maintenance Manual.

NOTES

- THIS IS A CATEGORY A REPAIR.
  THE INSPECTIONS GIVEN IN THE BASELINE ZONAL INSPECTION (BZI) ARE SUFFICIENT TO MAINTAIN THE DAMAGE TOLERANCE OF THE INITIAL STRUCTURE WITH THIS REPAIR INSTALLED. REFER TO 51-00-6 FOR REPAIR CATEGORIES, BZI DEFINITION AND REPAIR ASSESSMENT INFORMATION.
- THIS REPAIR WHEN INSTALLED ON THE LOWER LOBE CARGO DOORS WILL HAVE AN EFFECT ON THE STRUCTURAL SIGNIFICANT ITEM (SSI) NUMBER F-1 OF THE SUPPLEMENTAL STRUCTURAL INSPECTION DOCUMENT (SSID), BUT THE INSPECTIONS THAT ARE NECESSARY FOR F-1 ARE STILL APPLICABLE. THEREFORE, NO NEW INSPECTION ALTERNATIVES ARE NECESSARY FOR THIS REPAIR. THIS REPAIR WILL NOT HAVE AN EFFECT ON SSI WHEN INSTALLED ON THE OTHER DOORS. REFER TO SRM 51-00-4, FIGURE 3 FOR THE SSI INFORMATION.
- REFER TO THE FOLLOWING WHEN USING THIS REPAIR:
  - SRM 51-10-2 FOR METAL PROTECTIVE TREATMENT
  - SRM 51-30 FOR FASTENER CODE, REMOVAL AND INSTALLATION, HOLE SIZES AND EDGE MARGINS
  - SRM 51-70 FOR AERODYNAMIC SMOOTHNESS REQUIREMENTS

[A] SAME MATERIAL, HEAT TREAT AND ONE GAGE GREATER THAN THE ORIGINAL SKIN

[B] SAME MATERIAL, HEAT TREAT AND GAGE AS ORIGINAL SKIN

[C] MINIMUM OF 3 FASTENERS PER LINE BETWEEN REPAIR ANGLE AND ORIGINAL ANGLES

[D] WHEN MS20426 RIVETS ARE USED, THE COUNTERSINK DEPTH SHOULD BE THE SAME AS THAT FOR A BACR15CE RIVET. MICROSHAVE THE RIVET HEAD AFTER INSTALLATION

[E] WHEN INSTALLING ANGLES, USE FILLERS AS REQUIRED IF GAP EXCEEDS 0.005. USE 2024-T3 CLAD OR 7075-T6 CLAD MATERIAL

[F] SAME MATERIAL, HEAT TREAT AND ONE GAGE GREATER THAN THE ORIGINAL ANGLE.

FASTENER SYMBOLS

+ ORIGINAL FASTENER LOCATIONS

-⊕- REPAIR FASTENER LOCATIONS

REPAIR MATERIAL			
PART		QTY	MATERIAL
[1]	DOUBLER	1	[A]
[2]	FILLER	1	[B]
[3]	ANGLE	2	[F]

Door Skin - Flush Repair of Damage Across a Beam
Figure 3 (Sheet 1)

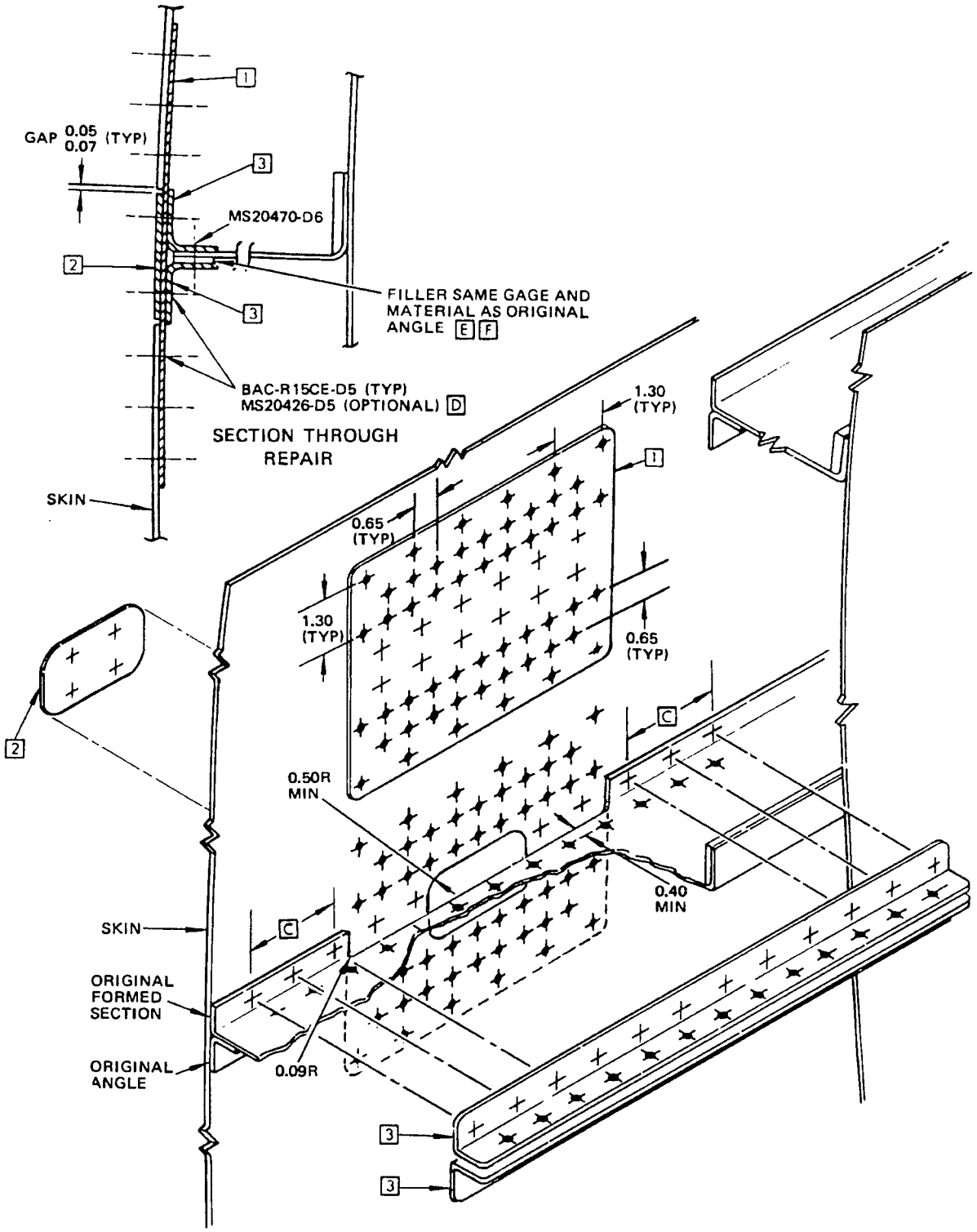

Door Skin - Flush Repair of Damage Across a Beam
Figure 3 (Sheet 2)

APPLICABILITY
THIS REPAIR APPLIES TO ALL DOORS WHERE SKIN THICKNESS IN THE REPAIR AREA IS CONSTANT.

REPAIR INSTRUCTIONS

1. Remove the inner skin panel for access if necessary.

   CAUTION: DO NOT MAKE A NICK OR GOUGE IN THE BEAM WHEN YOU MAKE THE CUTOUT

2. Make the cutout as shown in Detail I.
3. Return the adjacent indented or projecting skin to contour.
4. Make the repair parts given in Table I. Make the surface contour of the repair parts the same as the surface contour of the skin panel.
5. Assemble the repair parts. See Detail I.
6. Drill the fastener holes.

   NOTE: If there are more than three initial fastener holes, one after another, in one of the critical fastener rows, these holes can be zero-timed. Zero-timing will make the Category B inspection threshold start from the time the repair was installed. Refer to the paragraph "Hole Preparation for Repairs" in SRM 51-10-1 for the zero-timing procedure.

7. Disassemble the repair parts.
8. Remove all nicks, scratches, burrs, sharp edges and corners from the initial skin and the repair parts.
9. Apply a protective chemical conversion coating to the repair parts and to the cut edges of the initial skin. Refer to SRM 51-10-2.
10. Apply one coat of BMS 10-79, Type II or III primer to the repair parts and the cut edges of the skin. Refer to SOPM 20-44-04.
11. Install countersunk repair washers in initial holes in the skin.
12. Install repair parts with BMS 5-95 sealant between the mating surfaces. Refer to SRM 51-20-4.
13. Install the fasteners given in Table II.
14. Apply a fillet seal with BMS 5-95 sealant along the edges of the repair doubler. Refer to SRM 51-20-4.
15. Apply the finish to the repair area. Refer to AMM 51-21.
16. Apply corrosion inhibiting compound on the internal surfaces. Refer to SRM 51-10-2.
17. Replace inner skin panel if removed.

NOTES

- A DAMAGE TOLERANCE ASSESSMENT IS NECESSARY FOR THE MAIN CARGO DOOR AND THE LOWER LOBE CARGO DOORS. FOR THESE DOORS, THIS REPAIR IS CATEGORY A AND NO SUPPLEMENTAL INSPECTIONS ARE NECESSARY IF CONDITIONS 1, 2 OR 3 IS MET:

  1. a) THE CRITICAL FASTENER ROWS IN THE SKIN CAN BE VISUALLY INSPECTED FROM THE INSIDE

     b) THE BASE SKIN THICKNESS IS EQUAL TO OR GREATER THAN 0.056 INCHES

  2. a) THE LENGTH AND WIDTH OF THE REPAIR DOUBLER IS LESS THAN OR EQUAL TO 12 INCHES

     b) THE CRITICAL FASTENER ROWS IN THE SKIN CAN BE VISUALLY INSPECTED FROM THE INSIDE

     c) NO OTHER REPAIR DOUBLER IS INSTALLED WITHIN 3 INCHES IN EITHER DIRECTION

  3. a) THE LENGTH OF THE REPAIR DOUBLER, IN THE LONGITUDINAL DIRECTION, IS LESS THAN OR EQUAL TO 12 INCHES

     b) THE REPAIR DOUBLER IS LOCATED BELOW S-10L OR S-10R

     c) THE CRITICAL FASTENER ROWS IN THE SKIN CAN BE VISUALLY INSPECTED FROM THE INSIDE

     d) NO OTHER REPAIR DOUBLER IS INSTALLED WITHIN 3 INCHES IN THE LONGITUDINAL DIRECTION

  IF THIS REPAIR IS NOT CATEGORY A, THEN IT IS CATEGORY B. THE CATEGORY B REPAIR HAS FAA APPROVAL IF YOU DO THE SUPPLEMENTAL INSPECTIONS GIVEN IN TABLE III. INCORPORATION OF THESE INSPECTION REQUIREMENTS INTO THE AIRPLANE'S MAINTENANCE PROGRAM SATISFIES THE DAMAGE TOLERANCE ASSESSMENT OF THE REPAIR SPECIFIED BY THE REPAIR ASSESSMENT PROGRAM. THIS ASSESSMENT CAN BE DONE AFTER YOU RELEASE THE AIRPLANE TO SERVICE. REFER TO SRM 51-00-6 FOR GENERAL DATA ABOUT THE REPAIR ASSESSMENT PROGRAM. SEE DETAIL II FOR THE INSPECTION AREA.

  A DAMAGE TOLERANCE ASSESSMENT IS NOT NECESSARY FOR OTHER DOORS. THUS, THEY ARE NOT INCLUDED IN THE REPAIR ASSESSMENT PROGRAM.

Door Skin - Typical External Repair for Damage at a Beam
Figure 5 (Sheet 1)

BOEING PROPRIETARY - Copyright © - Unpublished Work - See title page for details.

NOTES (CONT)

- THIS REPAIR WHEN INSTALLED ON THE LOWER LOBE CARGO DOORS WILL HAVE AN EFFECT ON THE STRUCTURAL SIGNIFICANT ITEM (SSI) NUMBER F-1, AND A NEW INSPECTION METHOD IS NECESSARY FOR F-1. SEE TABLE IV FOR NEW INSPECTION REQUIREMENTS FOR F-1. THIS REPAIR WILL NOT HAVE AN EFFECT ON AN SSI WHEN INSTALLED ON THE OTHER DOORS. REFER TO SRM 51-00-4, FIGURE 3 FOR THE APPLICABLE SSI DATA.
- D = FASTENER DIAMETER
- REFER TO THE FOLLOWING WHEN USING THIS REPAIR:
  - AMM 51-21 FOR INTERIOR AND EXTERIOR FINISHES
  - SOPM 20-44-04 FOR APPLICATION OF URETHANE COMPATIBLE PRIMER
  - SRM 51-00-6 FOR REPAIR CATEGORIES, DEFINITIONS AND REPAIR ASSESSMENT PROGRAM DATA
  - SRM 51-10-1 FOR INSPECTION AND REMOVAL OF DAMAGE AND ZERO-TIMING PROCEDURE
  - SRM 51-10-2 FOR PROTECTIVE TREATMENT OF METALS
  - SRM 51-20-4 FOR REPAIR SEALING
  - SRM 51-30 FOR FASTENER CODE, REMOVAL, INSTALLATION, HOLE SIZES, EDGE MARGINS AND SUBSTITUTION
  - SRM 51-70 FOR AERODYNAMIC SMOOTHNESS.

[A] SAME MATERIAL AND HEAT TREAT BUT ONE GAGE THICKER THAN INITIAL SKIN. REFER TO SRM 51-20-1, FIG. 2, FOR LIST OF AVAILABLE SHEET METAL GAGES.

[B] SAME MATERIAL AND GAGE AS INITIAL SKIN.

[C] FOR THE MAIN OR LOWER LOBE CARGO DOOR, IF POSSIBLE, EXTEND THE REPAIR DOUBLER AN ADDITIONAL ROW PAST THE INITIAL FASTENER ROWS OF INTERNAL STRUCTURE. IF THE REPAIR DOUBLER ENDS ON INTERNAL STRUCTURE, THE REPAIR IS CATEGORY B. [I]

NOTE: INTERNAL STRUCTURE INCLUDES BEAMS, FRAMES, INTERCOSTALS, REINFORCING STRAPS OR OTHER STRUCTURE THAT IS ATTACHED TO THE SKIN WITH FASTENERS.

[D] WHERE THE FASTENER COUNTERSINK WILL PENETRATE 80% OF THE REPAIR DOUBLER THICKNESS, INSTALL A PROTRUDING HEAD FASTENER.

[E] WHEN MS20426 RIVETS ARE USED, THE COUNTERSINK DEPTH SHOULD BE THE SAME AS FOR A BACR15CE RIVET. MICROSHAVE THE RIVET HEAD AFTER INSTALLATION.

[F] INSTALL REPAIR WASHERS AT THE INITIAL FASTENER LOCATIONS AS GIVEN IN SRM 51-30-8.

[G] WHERE INITIAL FASTENER HOLES HAVE BEEN DAMAGED OR ENLARGED, REPLACE WITH 1/32 INCH OVERSIZE REPAIR FASTENERS.

[H] REFER TO OPERATOR'S REPAIR ASSESSMENT GUIDELINES FOR THE REPEAT INSPECTION INTERVAL AND METHOD ALTERNATIVES.

[I] IF THE CRITICAL FASTENER ROWS HAVE THREE OR LESS INITIAL FASTENER HOLES, IN A SEQUENCE, THE INSPECTION THRESHOLD IS THE LATER OF:

- THE INITIAL SCHEDULED INSPECTION AS GIVEN IN THE OPERATOR'S REPAIR ASSESSMENT PROGRAM (RAP)
- 60,000 FLIGHT CYCLES AFTER THE REPAIR WAS INSTALLED.

IF ONE OR MORE OF THE CRITICAL FASTENER ROWS HAS MORE THAN THREE INITIAL FASTENER HOLES, IN A SEQUENCE, THE INSPECTION THRESHOLD IS THE LATER OF:

- THE INITIAL SCHEDULED INSPECTION AS GIVEN IN THE OPERATOR'S REPAIR ASSESSMENT PROGRAM (RAP)
- 60,000 FLIGHT CYCLES AFTER THE REPAIR WAS INSTALLED, IF THE INITIAL FASTENER HOLES HAVE BEEN ZERO-TIMED
- 4,000 FLIGHT CYCLES AFTER THE REPAIR WAS INSTALLED, IF THE INITIAL FASTENER HOLES HAVE NOT BEEN ZERO-TIMED.

FASTENER SYMBOLS

- REFERENCE FASTENER LOCATION
- REPAIR FASTENER LOCATIONS. SEE TABLE II FOR THE FASTENER TYPE.
- INITIAL FASTENER LOCATIONS. SEE TABLE II FOR THE FASTENER TYPE.

REPAIR MATERIAL			
PART		QTY	MATERIAL
1	DOUBLER	1	[A]
2	FILLER	1	[B]

TABLE I

FASTENERS			
INITIAL FASTENER LOCATION		REPAIR FASTENER LOCATION	
RECOM-MENDED	ALTERNATIVE	RECOM-MENDED	ALTERNATIVE
BACR15CE()D [G]	MS20426D() [E] BACR15BB()D [D] MS20470D() [D]	BACR15CE5D	MS2042D5 [E] BACR15BB5D [D] MS20470D5 [D]

TABLE II

Door Skin - Typical External Repair for Damage at a Beam
Figure 5 (Sheet 2)

BOEING PROPRIETARY - Copyright © - Unpublished Work - See title page for details.

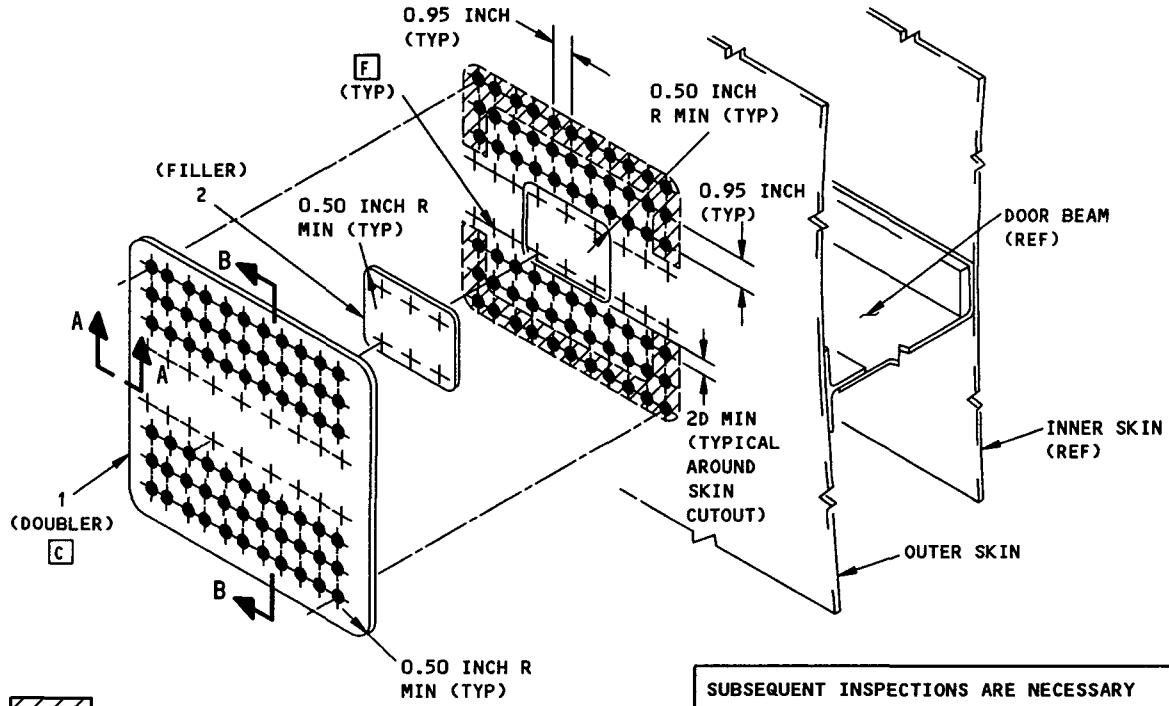

REPAIR AT BEAM
DETAIL I

SUBSEQUENT INSPECTIONS ARE NECESSARY FOR CATEGORY B REPAIRS ON THE MAIN CARGO DOOR OR LOWER LOBE CARGO DOOR. REFER TO TABLE III FOR INSPECTION REQUIREMENTS

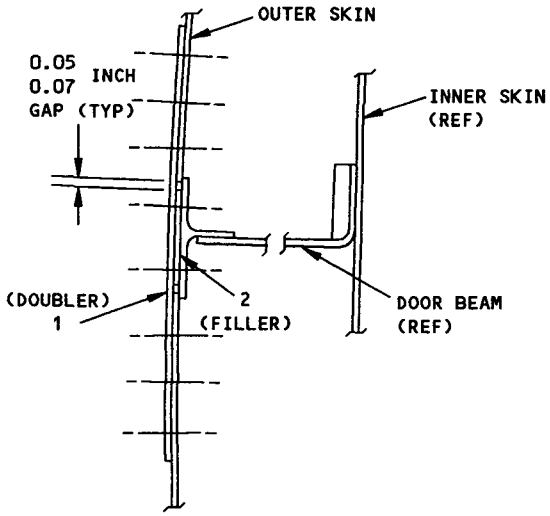

SECTION B-B

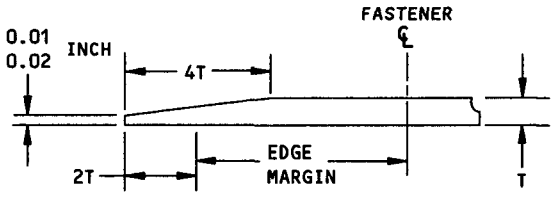

SECTION A-A
(TYP ALL EDGES)

Door Skin - Typical External Repair for Damage at a Beam
Figure 5 (Sheet 3)

BOEING PROPRIETARY - Copyright © - Unpublished Work - See title page for details.

CATEGORY B REPAIR INSPECTION REQUIREMENTS		
INSPECTION THRESHOLD	REPEAT INSPECTION ALTERNATIVES	
	METHOD	INTERVAL
I	H	H
NOTE: Inspect the skin around the first row of fasteners along the edge of the doubler as shown in Detail II.		

TABLE III

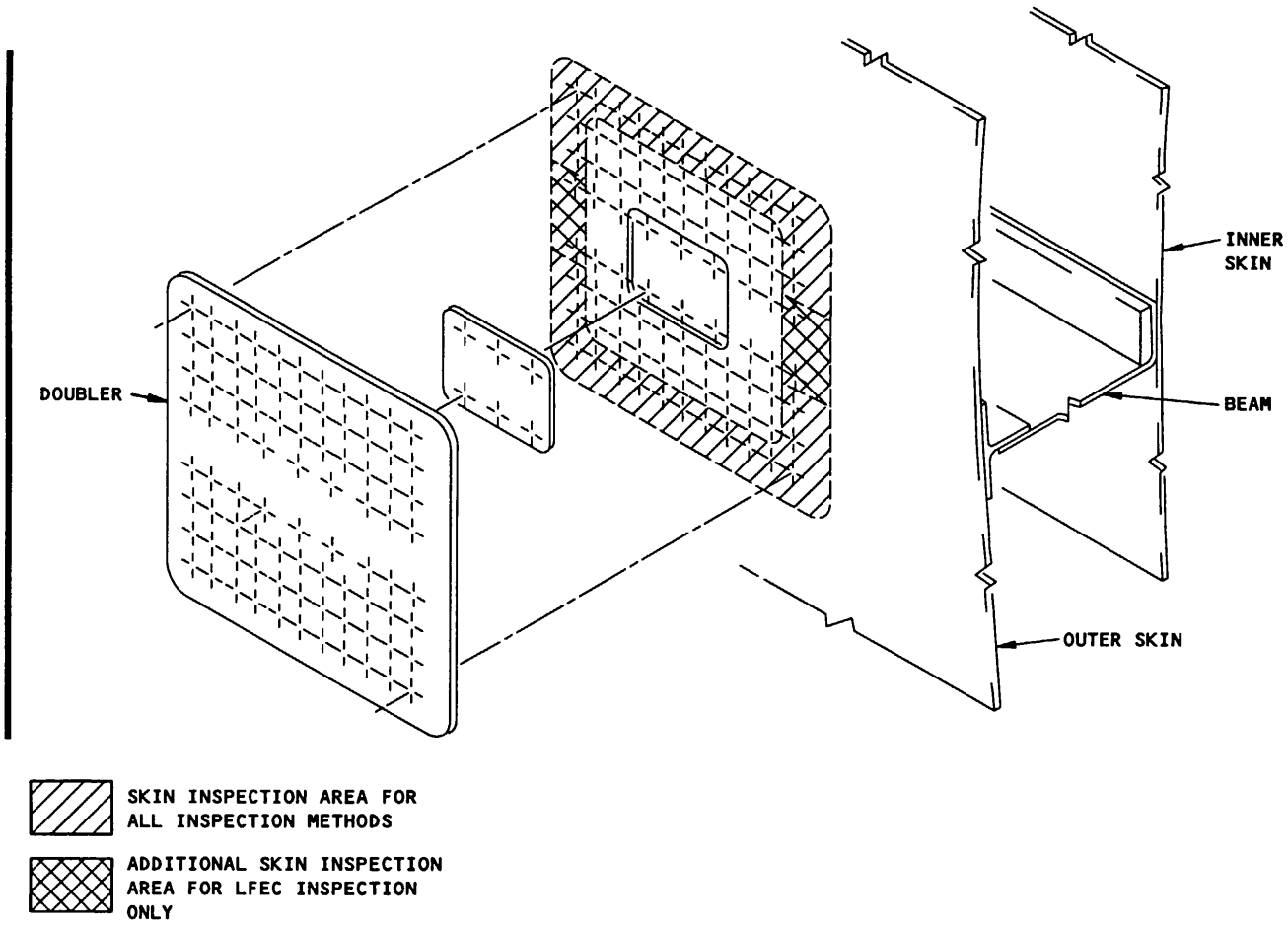

DETAIL II

Door Skin - Typical External Repair for Damage at a Beam
Figure 5 (Sheet 4)

BOEING PROPRIETARY - Copyright © - Unpublished Work - See title page for details.

SSID NUMBER F-1 INSPECTION REQUIREMENTS			
INSPECTION THRESHOLD	REPEAT INSPECTION		
	METHOD	INTERVAL	REFERENCE
66,000 CYCLES ON THE LOWER LOBE CARGO DOOR	LOW FREQUENCY EDDY CURRENT (LFEC)	27,000 CYCLES	737 NDT PART 6, 53-30-00, FIG. 5
NOTE: Inspect the initial stop beam chord in the area between the two rows of fastener holes as shown in Detail III. If the total cycles on the lower lobe cargo door is unknown or over the threshold, perform the initial inspection within 4,000 cycles.			

TABLE IV

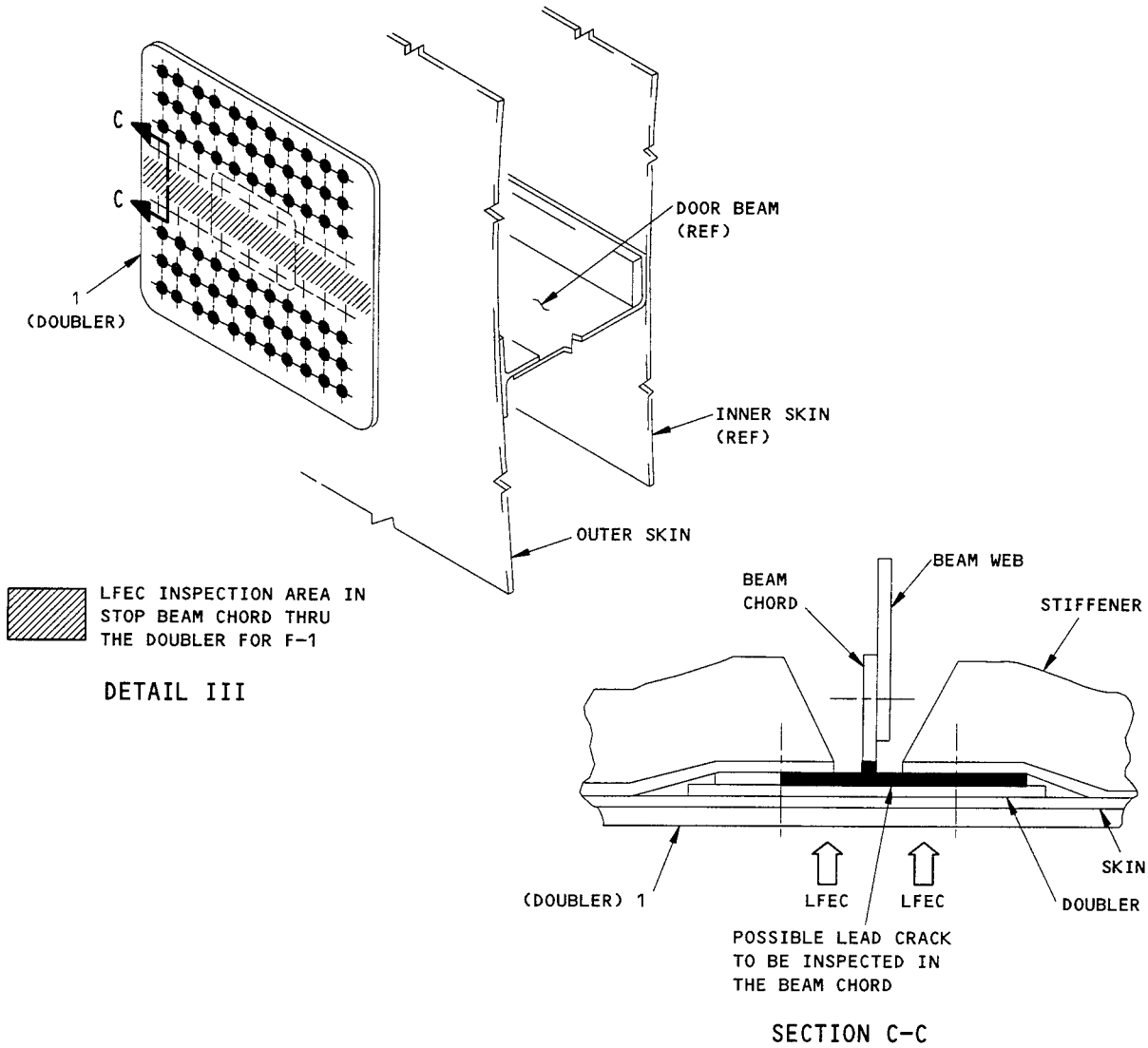

Door Skin - Typical External Repair for Damage at a Beam
Figure 5 (Sheet 5)

BOEING PROPRIETARY - Copyright © - Unpublished Work - See title page for details.

APPLICABILITY

THIS REPAIR APPLIES TO ALL DOORS WHERE SKIN THICKNESS IN THE REPAIR AREA IS CONSTANT.

REPAIR INSTRUCTIONS

1. Remove the inner skin panel for access if necessary.
2. Return the indented or projecting skin to contour.

CAUTION: DO NOT DAMAGE THE ADJACENT BEAM WHEN YOU MAKE THE CUTOUT.

3. Make the cutout as shown in Detail I.
4. Make the repair part given in Table I. Make the surface contour of the repair part the same as the surface contour of the skin panel.
5. Assemble the repair part. See Detail I.
6. Drill the fastener holes.

   NOTE: If there are more than three initial fastener holes, one after another, in one of the critical fastener rows, these holes can be zero-timed. Zero-timing will make the Category B inspection threshold start from the time the repair was installed. Refer to the paragraph "Hole Preparation for Repairs" in SRM 51-10-1 for the zero-timing procedure.

7. Disassemble the repair part.
8. Remove all nicks, scratches, burrs, sharp edges and corners from the initial skin and repair part.
9. Apply a protective chemical conversion coating to the bare surfaces and edges of initial skin and repair part. Refer to SRM 51-10-2.
10. Apply one coat of BMS 10-79, Type II or III primer to the repair part and to the cut edges of the initial skin. Refer to SOPM 20-44-04.
11. Install the repair part with BMS 5-95 sealant between the mating surface. Refer to SRM 51-20-4.
12. Install the fasteners given in Table II.
13. Apply a fillet seal with BMS 5-95 sealant along the edges of the repair part. Refer to SRM 51-20-4.
14. Apply the finish to the repair area. Refer to AMM 51-21.
15. Apply corrosion inhibiting compound to the internal surfaces. Refer to SRM 51-10-2.
16. Replace the inner skin panel if it was removed.

NOTES

- A DAMAGE TOLERANCE ASSESSMENT IS NECESSARY FOR THE MAIN CARGO DOOR AND THE LOWER LOBE CARGO DOORS. FOR THESE DOORS, THIS REPAIR IS CATEGORY A AND NO SUPPLEMENTAL INSPECTIONS ARE NECESSARY IF CONDITIONS 1, 2 OR 3 IS MET:

  1. a) THE CRITICAL FASTENER ROWS IN THE SKIN CAN BE VISUALLY INSPECTED FROM THE INSIDE

     b) THE BASE SKIN THICKNESS IS EQUAL TO OR GREATER THAN 0.056 INCHES.

  2. a) THE LENGTH AND WIDTH OF THE REPAIR DOUBLER IS LESS THAN OR EQUAL TO 12 INCHES

     b) THE CRITICAL FASTENER ROWS IN THE SKIN CAN BE VISUALLY INSPECTED FROM THE INSIDE

     c) NO OTHER REPAIR DOUBLER IS INSTALLED WITHIN 3 INCHES IN EITHER DIRECTION.

  3. a) THE LENGTH OF THE REPAIR DOUBLER, IN THE LONGITUDINAL DIRECTION, IS LESS THAN OR EQUAL TO 12 INCHES

     b) THE REPAIR DOUBLER IS LOCATED BELOW S-10L OR S-10R

     c) THE CRITICAL FASTENER ROWS IN THE SKIN CAN BE VISUALLY INSPECTED FROM THE INSIDE

     d) NO OTHER REPAIR DOUBLER IS INSTALLED WITHIN 3 INCHES IN THE LONGITUDINAL DIRECTION.

  IF THIS REPAIR IS NOT CATEGORY A, THEN IT IS CATEGORY B. THE CATEGORY B REPAIR HAS FAA APPROVAL IF YOU DO THE SUPPLEMENTAL INSPECTIONS GIVEN IN TABLE III. INCORPORATION OF THESE INSPECTION REQUIREMENTS INTO THE AIRPLANE'S MAINTENANCE PROGRAM SATISFIES THE DAMAGE TOLERANCE ASSESSMENT OF THE REPAIR SPECIFIED BY THE REPAIR ASSESSMENT PROGRAM. THIS ASSESSMENT CAN BE DONE AFTER YOU RELEASE THE AIRPLANE TO SERVICE. REFER TO SRM 51-00-6 FOR GENERAL DATA ABOUT THE REPAIR ASSESSMENT PROGRAM. SEE DETAIL II FOR THE INSPECTION AREA.

  A DAMAGE TOLERANCE ASSESSMENT IS NOT NECESSARY FOR OTHER DOORS. THUS, THEY ARE NOT INCLUDED IN THE REPAIR ASSESSMENT PROGRAM.

Door Skin - Typical External Repair for Damage Between Beams
Figure 6 (Sheet 1)

BOEING PROPRIETARY - Copyright © - Unpublished Work - See title page for details.

NOTES (CONT)

- THIS REPAIR, WHEN INSTALLED ON THE LOWER CARGO DOOR AND EXTENDED OVER THE BEAM, WILL HAVE AN EFFECT ON THE STRUCTURAL SIGNIFICANT ITEM (SSI) NUMBER F-1. A NEW INSPECTION METHOD IS NECESSARY FOR F-1. SEE TABLE IV FOR NEW INSPECTION REQUIREMENTS FOR F-1. THIS REPAIR WILL NOT HAVE AN EFFECT ON AN SSI WHEN INSTALLED ON THE OTHER DOORS OR BETWEEN THE BEAMS ON THE CARGO DOORS. REFER TO SRM 51-00-4, FIG. 3 FOR THE APPLICABLE SSI DATA.
- D = FASTENER DIAMETER
- WHEN YOU USE THIS REPAIR REFER TO:
  - AMM 51-21 FOR INTERIOR AND EXTERIOR FINISHES
  - SOPM 20-44-04 FOR APPLICATION OF URETHANE COMPATIBLE PRIMER
  - SRM 51-00-6 FOR REPAIR CATEGORIES, DEFINITIONS AND REPAIR ASSESSMENT PROGRAM DATA
  - SRM 51-10-1 FOR INSPECTION AND REMOVAL OF DAMAGE AND ZERO-TIMING PROCEDURE
  - SRM 51-10-2 FOR PROTECTIVE TREATMENT OF METALS
  - SRM 51-20-4 FOR REPAIR SEALING
  - SRM 51-30 FOR FASTENER CODE, REMOVAL,
  - INSTALLATION, HOLE SIZES, EDGE MARGINS AND SUBSTITUTION.

[A] SAME MATERIAL AND HEAT TREAT BUT ONE GAGE THICKER THAN THE INITIAL SKIN. REFER TO SRM 51-20-1, FIG. 2, FOR LIST OF AVAILABLE SHEET METAL GAGES.

[B] FOR THE MAIN OR LOWER LOBE CARGO DOOR, IF POSSIBLE, EXTEND THE REPAIR DOUBLER AN ADDITIONAL ROW PAST THE INITIAL FASTENER ROWS OF INTERNAL STRUCTURE. IF THE REPAIR DOUBLER ENDS ON INTERNAL STRUCTURE, THE REPAIR IS CATEGORY B. [F]

NOTE: INTERNAL STRUCTURE INCLUDES BEAMS, FRAMES, INTERCOSTALS, REINFORCING STRAPS OR OTHER STRUCTURE THAT IS ATTACHED TO THE SKIN WITH FASTENERS.

[C] WHEN MS20426 RIVETS ARE USED, THE COUNTERSINK DEPTH SHOULD BE THE SAME AS FOR A BACR15CE RIVET. MICROSHAVE THE RIVET HEAD AFTER INSTALLATION.

[D] WHERE THE FASTENER COUNTERSINK WILL PENETRATE 80% OF THE REPAIR DOUBLER THICKNESS, INSTALL PROTRUDING HEAD FASTENER.

[E] REFER TO OPERATOR'S REPAIR ASSESSMENT GUIDELINES FOR THE REPEAT INSPECTION INTERVAL AND METHOD ALTERNATIVES.

[F] IF THE CRITICAL FASTENER ROWS HAVE THREE OR LESS INITIAL FASTENER HOLES, IN A SEQUENCE, THE INSPECTION THRESHOLD IS THE LATER OF:

- THE INITIAL SCHEDULED INSPECTION AS GIVEN IN THE OPERATOR'S REPAIR ASSESSMENT PROGRAM (RAP)
- 60,000 FLIGHT CYCLES AFTER THE REPAIR WAS INSTALLED.

IF ONE OR MORE OF THE CRITICAL FASTENER ROWS HAS MORE THAN THREE INITIAL FASTENER HOLES, IN A SEQUENCE, THE INSPECTION THRESHOLD IS THE LATER OF:

- THE INITIAL SCHEDULED INSPECTION AS GIVEN IN THE OPERATOR'S REPAIR ASSESSMENT PROGRAM (RAP)
- 60,000 FLIGHT CYCLES AFTER THE REPAIR WAS INSTALLED, IF THE INITIAL FASTENER HOLES HAVE BEEN ZERO-TIMED
- 4,000 FLIGHT CYCLES AFTER THE REPAIR WAS INSTALLED, IF THE INITIAL FASTENER HOLES HAVE NOT BEEN ZERO-TIMED.

FASTENER SYMBOLS

-¦- REFERENCE FASTENER LOCATION.

-✚- REPAIR FASTENER LOCATION. SEE TABLE II FOR THE FASTENER TYPE.

REPAIR MATERIAL			
PART		QTY	MATERIAL
1	DOUBLER	1	[A]

TABLE I

REPAIR FASTENERS	
RECOMMENDED	ALTERNATIVE
BACR15CE5D	MS20426D5 [C] BACR15BB5D [D] MS20470D5 [D]

TABLE II

Door Skin - Typical External Repair for Damage Between Beams
Figure 6 (Sheet 2)

BOEING PROPRIETARY - Copyright © - Unpublished Work - See title page for details.

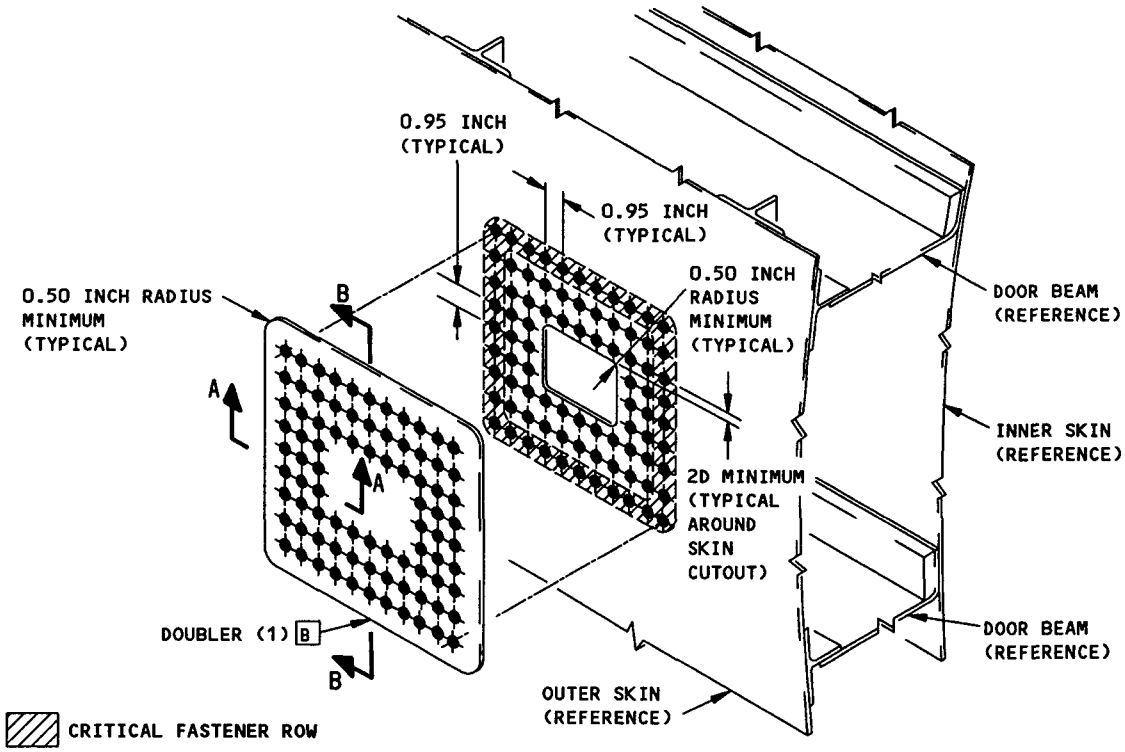

REPAIR BETWEEN BEAMS
DETAIL I

SUBSEQUENT INSPECTIONS ARE NECESSARY FOR CATEGORY B REPAIRS ON THE MAIN CARGO DOOR OR LOWER LOBE CARGO DOORS. REFER TO TABLE III FOR INSPECTION REQUIREMENTS.

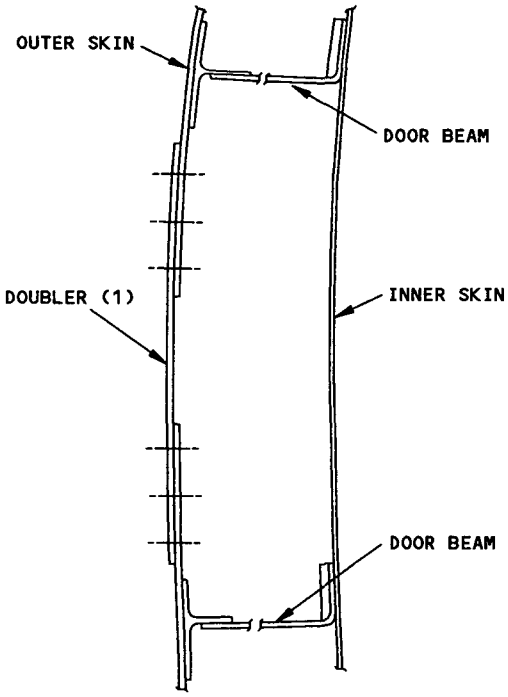

SECTION B-B

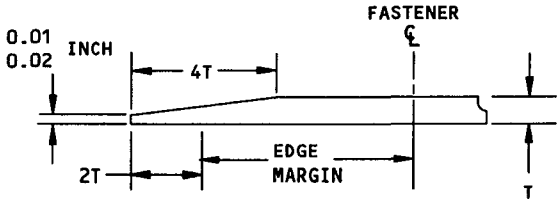

SECTION A-A
(TYPICAL ALL EDGES)

Door Skin - Typical External Repair for Damage Between Beams
Figure 6 (Sheet 3)

BOEING PROPRIETARY - Copyright © - Unpublished Work - See title page for details.

CATEGORY B REPAIR INSPECTION REQUIREMENTS		
INSPECTION THRESHOLD	REPEAT INSPECTION ALTERNATIVES	
	METHOD	INTERVAL
F	E	E

NOTE: Inspect the skin around the first row of fasteners along the edge of the doubler as shown in Detail II.

TABLE III

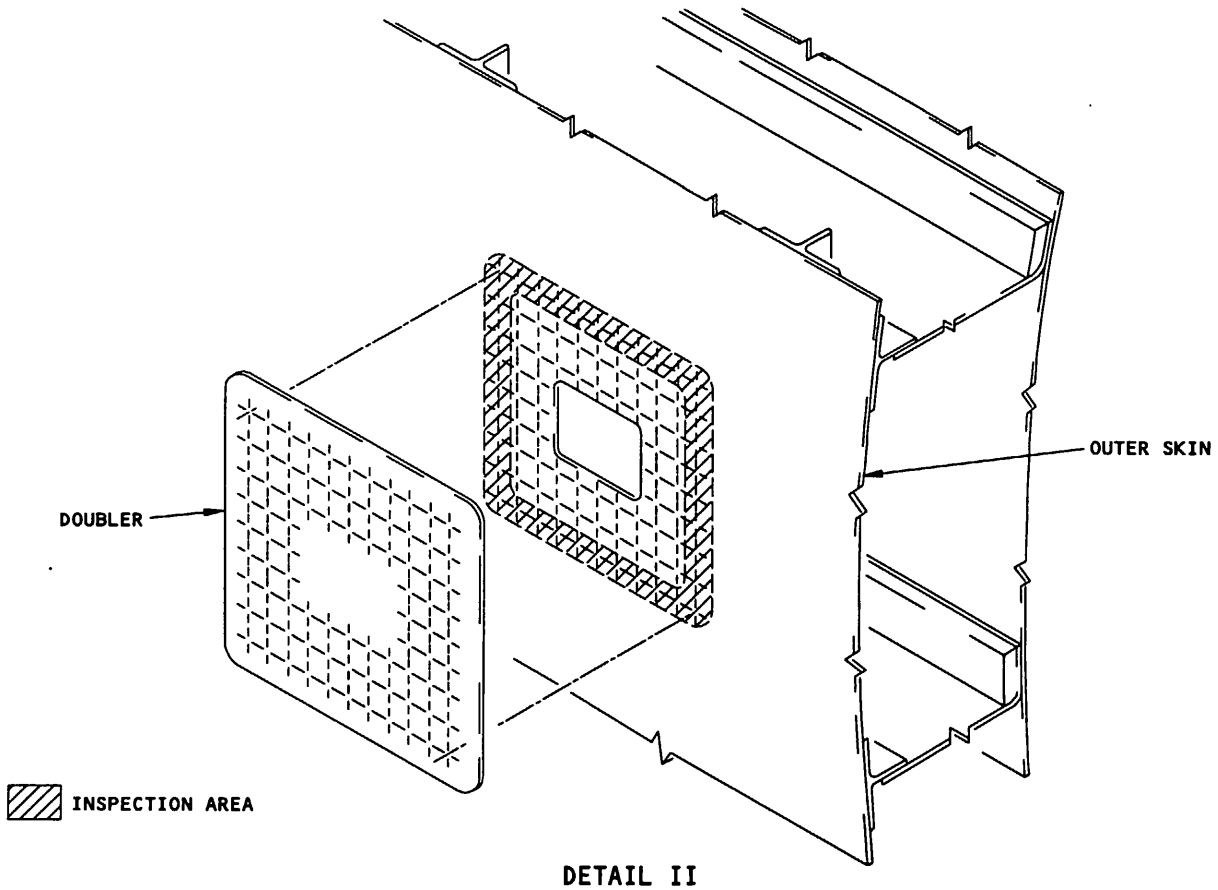

DETAIL II

Door Skin - Typical External Repair for Damage Between Beams
Figure 6 (Sheet 4)

BOEING PROPRIETARY - Copyright © - Unpublished Work - See title page for details.

SSID NUMBER F-1 INSPECTION REQUIREMENTS			
INSPECTION THRESHOLD	REPEAT INSPECTION		
	METHOD	INTERVAL	REFERENCE
66,000 CYCLES ON THE LOWER LOBE CARGO DOOR	LOW FREQUENCY EDDY CURRENT (LFEC)	27,000 CYCLES	737 NDT PART 6, 53-30-00, FIG. 5
NOTE: Inspect the initial stop beam chord in the area between the two rows of fastener holes as shown in Detail III. If the total cycles on the lower lobe cargo door is unknown or over the threshold, perform the initial inspection within 4,000 cycles.			

(ONLY APPLIES, IF THE REPAIR EXTENDS OVER THE STOP BEAM)
TABLE IV

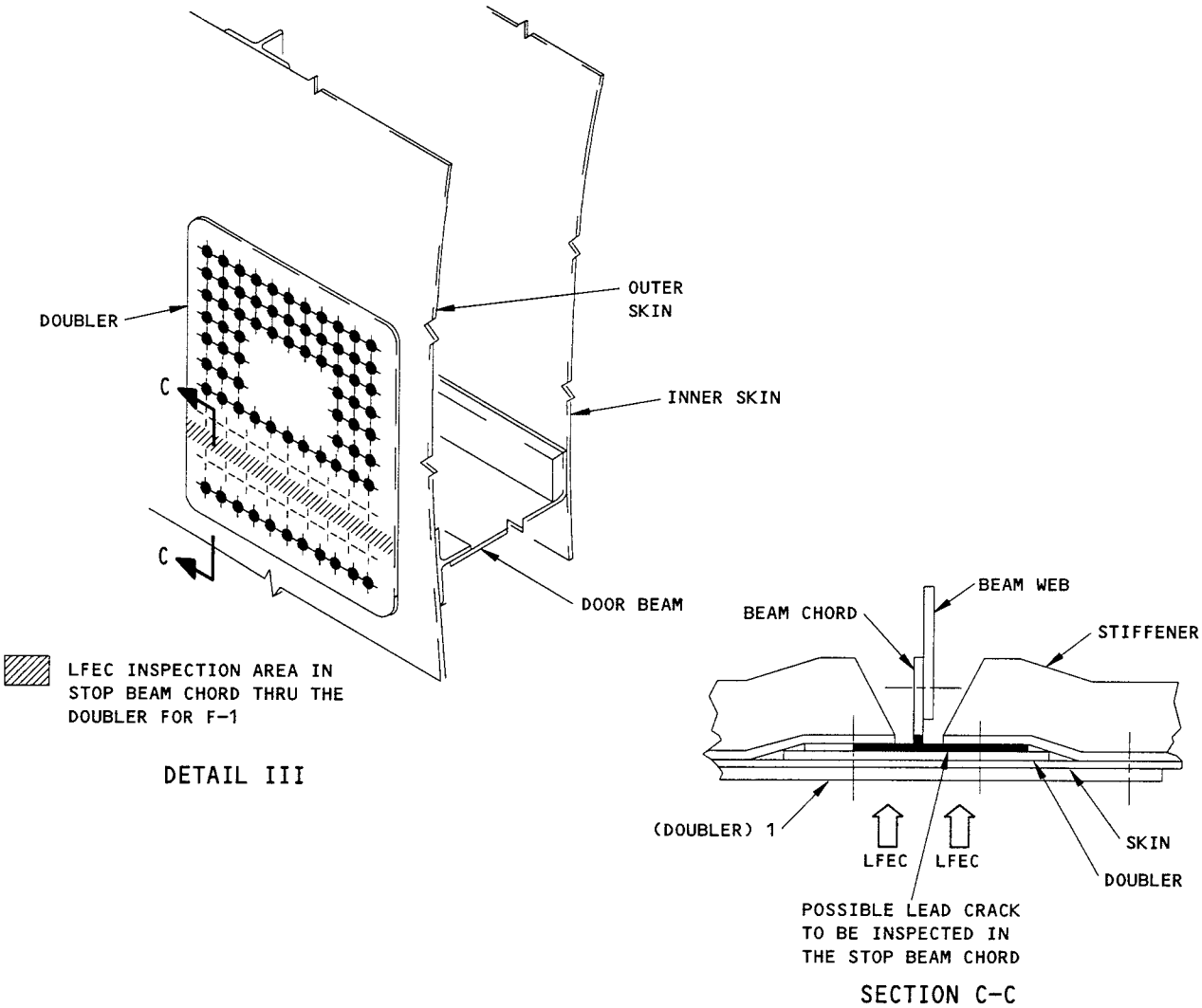

Door Skin - Typical External Repair for Damage Between Beams
Figure 6 (Sheet 5)

BOEING PROPRIETARY - Copyright © - Unpublished Work - See title page for details.

APPLICABILITY

THIS REPAIR IS APPLICABLE TO DAMAGE ON A DOOR SKIN WHERE THE SKIN HAS A CONSTANT THICKNESS

REPAIR INSTRUCTIONS

1. Get access to the damaged area.
2. Drill out the damage. Make the diameter of the hole 0.03 inch larger than the length of the damage, up to a maximum diameter of 1.00 inch. The center of the hole must be a minimum of 4 times the diameter of the hole from a fastener hole, an edge or a cutout in the skin.
3. Make the repair parts. See Table I.
4. Assemble the repair parts and drill the fastener holes.
5. Disassemble the repair parts.
6. Remove the nicks, scratches, gouges, burrs, and sharp edges from the repair parts and the initial skin.
7. Apply a chemical conversion coating to the repair parts and to the bare surfaces of the skin. Refer to SRM 51-10-2.
8. Apply one layer of BMS 10-11, Type I primer to the repair parts and to the bare surfaces of the skin. Refer to SOPM 20-41-02.
9. Install the repair parts with BMS 5-95 sealant between the mating surfaces.
10. Install the fasteners. Fasteners that are not made of aluminum must be installed wet with BMS 5-95 sealant.
11. Apply one layer of BMS 10-79, Type III finish to the repair area. Refer to SOPM 20-44-04.
12. Apply a layer of BMS 3-23 corrosion inhibiting compound to the repair area. Refer to SRM 51-10-2.

NOTES

- MAKE A CAREFUL VISUAL INSPECTION OF THE OUTER SKIN IN THE REPAIR AREA EACH 200 TO 300 FLIGHT HOURS. REPLACE THE REPAIR WITH A PERMANENT REPAIR AT OR BEFORE 2500 FLIGHT HOURS OR THE NEXT "C" CHECK. THIS REPAIR HAS FAA APPROVAL IF THE INSPECTIONS SHOWN IN THIS FIGURE ARE COMPLETED AT THE SPECIFIED TIMES.
- WHEN YOU USE THIS REPAIR REFER TO:
  - SOPM 20-41-02 AND SOPM 20-44-04 FOR THE APPLICATION OF FINISHES
  - SRM 51-10-1 FOR DAMAGE CLASSIFICATION
  - SRM 51-10-2 FOR PROTECTIVE TREATMENT OF METALLIC AND GRAPHITE MATERIALS
  - SRM 51-20-4 FOR REPAIR SEALING
  - SRM 51-30 FOR FASTENER CODE, INSTALLATION AND REMOVAL, HOLE SIZES, AND EDGE MARGINS

REPAIR MATERIAL			
	PART	QTY	MATERIAL
1	DOUBLER	1	2024-T3 THAT IS 2 TIMES THE THICKNESS OF THE INITIAL SKIN
2	FILLER	1	2024-T3 THAT IS THE SAME THICKNESS AS THE INITIAL SKIN
3	DOUBLER	1	2024-T3 THAT IS 2 TIMES THE THICKNESS OF THE INITIAL SKIN

TABLE I

Typical Small Hole External Repair on Aluminum Door Skin
Figure 7 (Sheet 1)

BOEING PROPRIETARY - Copyright © - Unpublished Work - See title page for details.

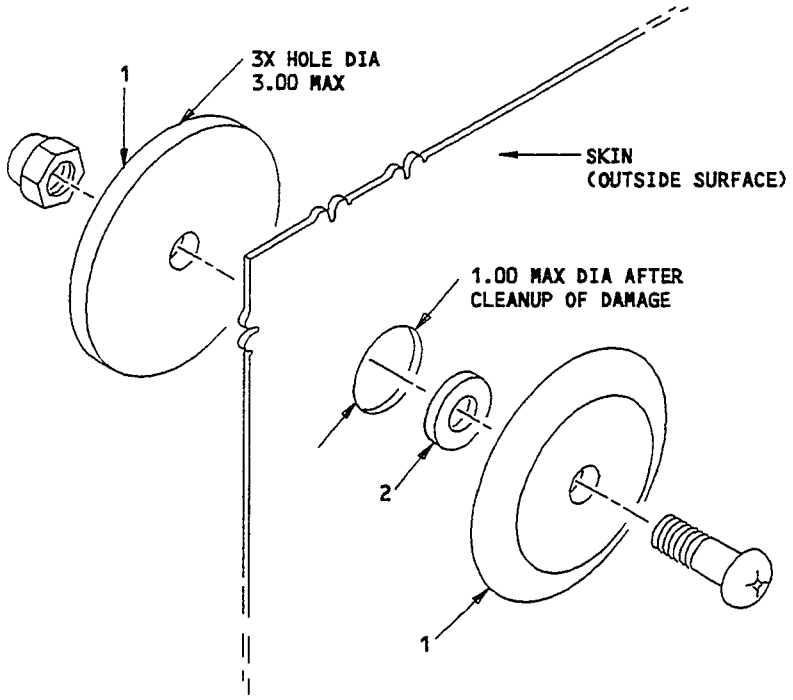

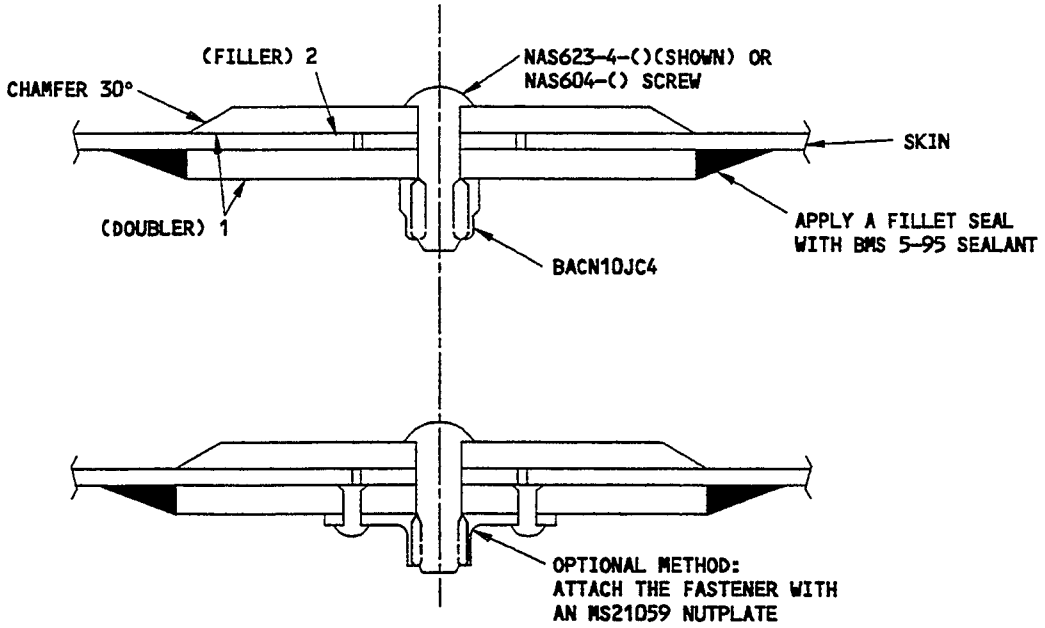

SECTION THROUGH REPAIR

Typical Small Hole External Repair on Aluminum Door Skin
Figure 7 (Sheet 2)

APPLICABILITY

THIS REPAIR IS APPLICABLE TO SINGLE LUG AND TRIPLE LUG CONFIGURATIONS FOR THE:

- FORWARD ENTRY DOOR UPPER AND LOWER GATE
- FORWARD GALLEY DOOR UPPER AND LOWER GATE
- AFT GALLEY DOOR LOWER GATE
- AFT ENTRY DOOR LOWER GATE

REFER TO TABLE II FOR YOUR CONFIGURATION

REPAIR INSTRUCTIONS

1. Get access to the damaged area.
2. Cut and remove the clevis flush with the inboard gate surface.
3. Do a High Frequency Eddy Current (HFEC) inspection of the cut surface to make sure there are no cracks. Refer to NDT Part 6, 51-00-00, Figure 23.
4. Make the repair parts. See Table I.
5. Assemble the repair parts and drill the fastener holes. See Detail I.
6. Disassemble the repair parts.
7. Remove the nicks, scratches, gouges, burrs, and sharp edges from the repair parts and the gate.
8. Apply a chemical conversion coating to the repair parts. Refer to SRM 51-10-2.
9. Apply one layer of Magnesium Surface Treatment No. 19 to the bare surfaces of the gate. Refer to SOPM 20-43-02.
10. Apply two layers of BMS 10-11, Type I primer to the repair parts and to the repair area of the gate. Refer to SOPM 20-41-02.
11. Install the repair parts with BMS 5-95 sealant between the mating surfaces. Refer to SRM 51-20-4.
12. Install the fasteners wet with BMS 5-95 sealant. Refer to SRM 51-30.
13. Install the bushings wet with BMS 5-95 sealant.
14. Apply two layers of BMS 10-11, Type II finish to the repair area. Refer to SOPM 20-41-02.

NOTES

- THIS REPAIR WILL NOT HAVE AN EFFECT ON A STRUCTURALLY SIGNIFICANT ITEM (SSI) GIVEN IN SRM 51-00-4, FIG. 3. THUS, NO CHANGE TO THE SUPPLEMENTAL STRUCTURAL INSPECTION DOCUMENT (SSID) INSPECTION PROGRAM IS NECESSARY.
- WHEN YOU USE THIS REPAIR REFER TO:
  - AMM 51-21 FOR EXTERIOR AND INTERIOR FINISHES
  - AMM 51-31 FOR SEALS AND SEALING
  - SOPM 20-41-02 FOR APPLICATION OF FINISHES
  - SOPM 20-43-02 FOR ANODIZING OF MAGNESIUM ALLOYS
  - SRM 51-10-1 FOR INVESTIGATION AND CLEANUP OF DAMAGE
  - SRM 51-10-2 FOR PROTECTIVE TREATMENT OF METALLIC AND GRAPHITE MATERIALS.
  - SRM 51-20-4 FOR REPAIR SEALING
  - SRM 51-30 FOR FASTENER CODE, INSTALLATION AND REMOVAL, HOLE SIZES AND EDGE MARGINS.
- D = FASTENER DIAMETER
- MAINTAIN 2D EDGE MARGIN AND 4D TO 6D SPACING FOR ALL FASTENERS
- INSTALL A MINIMUM OF 6 FASTENERS THROUGH EACH SIDE OF THE HORIZONTAL FLANGE OF THE PIE FITTING.

[A] MACHINE THE PIE FITTING TO AGREE WITH INITIAL DOOR GATE SHAPE. THE SHAPE IS DIFFERENT FOR DIFFERENT DOOR GATE CONFIGURATIONS.

[B] THE LOCATION OF THE INITIAL DRAIN HOLES ARE DIFFERENT FOR DIFFERENT DOOR GATE CONFIGURATIONS. IF THE REPAIR PARTS COVER THE INITIAL DRAIN HOLES, FILL THE HOLES WITH BMS 5-95 SEALANT. DRILL THE NEW DRAIN HOLES (0.25 INCH MINIMUM) AS SHOWN IN DETAIL I. MAINTAIN 0.40 INCH MINIMUM SPACING FROM THE INITIAL DRAIN HOLES. APPLY ONE LAYER OF MAGNESIUM SURFACE TREATMENT NO. 19 TO THE BARE SURFACES OF THE HOLES. APPLY BMS 5-125, TYPE II LEVELING COMPOUND TO THE INNER SURFACE OF THE GATE FOR CORRECT DRAINAGE.

[C] UPPER GATE LUG ASSEMBLY ONLY.

[D] APPLY A FILLET SEAL OF BMS 5-79 SEALANT AROUND THE BUSHING FLANGE. NO SEALANT IS PERMITTED ON THE BUSHING FACES.

[E] SHAPE THE RADIUS FILLERS TO ALLOW INSTALLATION THROUGH THE GATE HOLES. KEEP THE FASTENER SPACINGS.

Passenger/Crew Entry and Galley Door - Upper and Lower Gate Lug Repair
Figure 8 (Sheet 1)

BOEING PROPRIETARY - Copyright © - Unpublished Work - See title page for details.

FASTENER SYMBOLS

+ REPAIR FASTENER LOCATION. INSTALL A BACB30NX5K HEX DRIVE BOLT WITH A BACC30X5 COLLAR.

REPAIR MATERIAL			
PART NO.	PART	QUANTITY	MATERIAL
1	PIE FITTING	1	7075-T7351 PLATE [A]
2	RADIUS FILLER	2	0.15 7075-T6 [E]
3	BUSHING	2	SEE TABLE II

TABLE I

Passenger/Crew Entry and Galley Door - Upper and Lower Gate Lug Repair
Figure 8 (Sheet 2)

L56165

BOEING PROPRIETARY - Copyright © - Unpublished Work - See title page for details.

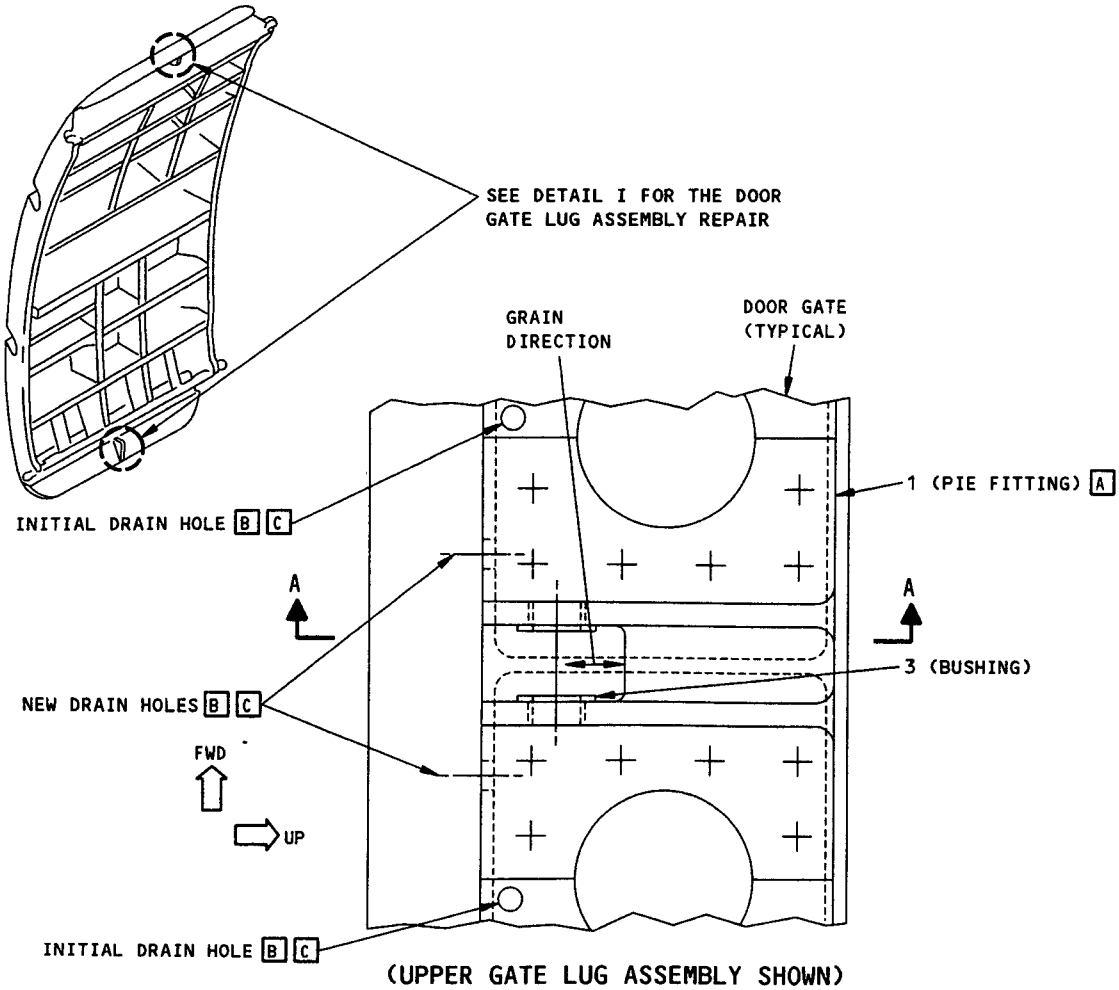

(UPPER GATE LUG ASSEMBLY SHOWN)
DETAIL I

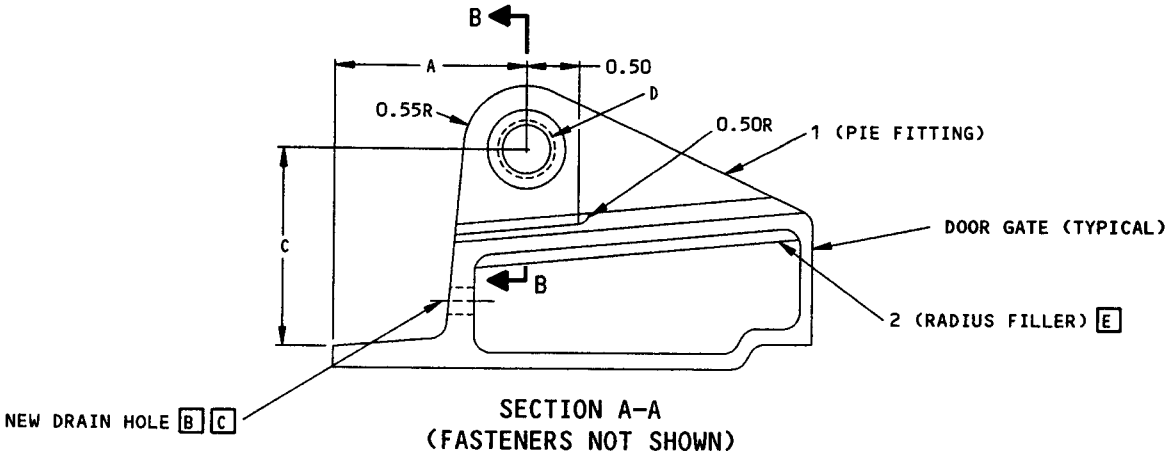

SECTION A-A
(FASTENERS NOT SHOWN)

Passenger/Crew Entry and Galley Door - Upper and Lower Gate Lug Repair
Figure 8 (Sheet 3)

BOEING PROPRIETARY - Copyright © - Unpublished Work - See title page for details.

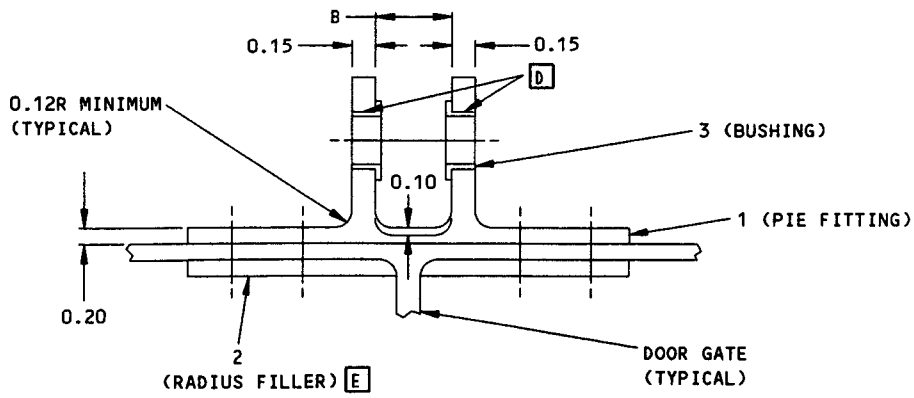

SECTION B-B

LOCATION	DESCRIPTION	DRAWING NUMBER	PART NUMBER	A	B	C	D	BUSHING
UPPER GATE	FORWARD ENTRY	65-1647	-2	1.13	0.443/0.438	1.78	0.3754/0.3748	BACB28X4D
			-4	1.13	0.50/0.49	1.78	0.3754/0.3748	BACB28X4D
			-7	1.06	0.50/0.49	1.78	0.3754/0.3748	BACB28X4D
			-9	1.06	0.50/0.49	1.78	0.3754/0.3748	BACB28X4D
	FORWARD GALLEY	65-50572	-4	1.75	0.50/0.49	1.67	0.3769/0.3759	NAS77A4
			-501	1.75	0.50/0.49	1.67	0.3769/0.3759	NAS77A4
			-503	1.75	0.50/0.49	1.67	0.3769/0.3759	NAS77A4
LOWER GATE	FORWARD ENTRY	65-1648	-4	1.94	0.45/0.44	1.60	0.3754/0.3748	BACB28X4D
			-5	1.94	0.45/0.44	1.60	0.3754/0.3748	BACB28X4D
			-7	1.94	0.50/0.49	1.60	0.3754/0.3748	BACB28X4D
			-10	1.94	0.50/0.49	1.60	0.3754/0.3748	BACB28X4D
	FORWARD GALLEY	65-50573	-1	1.83	0.50/0.49	1.65	0.3769/0.3759	NAS77A4
			-4	1.83	0.50/0.49	1.65	0.3769/0.3759	NAS77A4
			-501	1.83	0.50/0.49	1.65	0.3769/0.3759	NAS77A4
	AFT ENTRY, AFT GALLEY	65-55478	-1	1.84	0.55/0.54	*	0.3769/0.3759	NAS77A4
			-2	1.84	0.55/0.54	*	0.3769/0.3759	NAS77A4
			-7	1.84	0.55/0.54	*	0.3769/0.3759	NAS77A4
			-8	1.84	0.55/0.54	*	0.3769/0.3759	NAS77A4
			-501	1.84	0.55/0.54	*	0.3769/0.3759	NAS77A4
			-502	1.84	0.55/0.54	*	0.3769/0.3759	NAS77A4

*REFER TO DRAWING NO. 65-55478 FOR THE DIMENSIONS.

TABLE II

Passenger/Crew Entry and Galley Door - Upper and Lower Gate Lug Repair
Figure 8 (Sheet 4)

BOEING PROPRIETARY - Copyright © - Unpublished Work - See title page for details.

APPLICABILITY

THIS REPAIR IS APPLICABLE TO THE:

- AFT GALLEY DOOR UPPER GATE
- AFT ENTRY DOOR UPPER GATE

REPAIR INSTRUCTIONS

1. Get access to the damaged area.
2. Cut and remove the clevis flush with the inboard gate surface.
3. Do a High Frequency Eddy Current (HFEC) inspection of the surface to make sure there are no cracks. Refer to NDT Part 6, 51-00-00, Figure 23.
4. Make the repair parts. See Table I.
5. Assemble the repair parts and drill the fastener holes. Drill new drain holes, 0.25 inch minimum. Maintain 0.40 inch minimum spacing from current drain holes. Apply one layer of Magnesium Surface Treatment No. 19 to the bare surfaces of the holes. Fill the initial drain holes with BMS 5-95 sealant. See Detail I.
6. Disassemble the repair parts.
7. Remove the nicks, scratches, gouges, burrs, and sharp edges from the repair parts and the gate.
8. Apply a chemical conversion coating to the repair parts. Refer to SRM 51-10-2.
9. Apply one layer of Magnesium Surface Treatment No. 19 to the bare surfaces of the gate. Refer to SOPM 20-43-02.
10. Apply two layers of BMS 10-11, Type I primer to the repair parts and to the repair area of the gate. Refer to SOPM 20-41-02.
11. Install the repair parts with BMS 5-95 sealant between the mating surfaces. Refer to SRM 51-20-4.
12. Install the fasteners wet with BMS 5-95 sealant.
13. Install the bushings wet with BMS 5-95 sealant. Refer to SRM 51-30.
14. Apply two layers of BMS 10-11, Type II finish to the repair area. Refer to SOPM 20-41-02.

NOTES

- WHEN YOU USE THIS REPAIR REFER TO:
  - SOPM 20-41-02 FOR APPLICATION OF FINISHES
  - SRM 51-10-1 FOR INVESTIGATION AND CLEANUP OF DAMAGE
  - SRM 51-10-2 FOR PROTECTIVE TREATMENT OF METALLIC AND GRAPHITE MATERIALS.
  - SRM 51-20-4 FOR REPAIR SEALING
  - SRM 51-30 FOR FASTENER CODE, INSTALLATION AND REMOVAL, HOLE SIZES AND EDGE MARGINS.
  - AMM 51-21 FOR EXTERIOR AND INTERIOR FINISHES
  - AMM 51-31 FOR SEALS AND SEALING
  - SOPM 20-43-02 FOR ANODIZING OF MAGNESIUM ALLOYS.
- D = FASTENER DIAMETER.
- MAINTAIN 2D EDGE MARGIN ON ALL FASTENERS
- MAINTAIN 4D TO 6D SPACING FOR ALL FASTENERS
- INSTALL A MINIMUM OF 7 FASTENERS THROUGH EACH SIDE OF THE HORIZONTAL FLANGE OF THE PIE FITTING.

[A] MACHINE THE PIE FITTING TO AGREE WITH INITIAL DOOR GATE SHAPE. THE SHAPE IS DIFFERENT FOR THE DIFFERENT DOOR GATE CONFIGURATIONS.

[B] FILL THE INITIAL DRAIN HOLES WITH BMS 5-95 SEALANT.

[C] MAINTAIN 0.40 INCH MINIMUM SPACING FROM INITIAL DRAIN HOLES. APPLY BMS 5-125, TYPE II LEVELING COMPOUND TO THE INNER SURFACE OF THE GATE FOR CORRECT DRAINAGE.

[D] APPLY A FILLET SEAL OF BMS 5-79 SEALANT AROUND THE BUSHING FLANGE. NO SEALANT IS PERMITTED ON THE BUSHING FLANGES.

[E] SHAPE THE RADIUS FILLERS TO ALLOW INSTALLATION THROUGH THE GATE HOLES. KEEP THE FASTENER SPACINGS.

FASTENER SYMBOLS

+ REPAIR FASTENER LOCATION. INSTALL A BACB30NX5K HEX DRIVE BOLT WITH A BACC30X5 COLLAR.

REPAIR MATERIAL			
PART NO.	PART	QUANTITY	MATERIAL
1	PIE FITTING	1	7075-T7351 PLATE [A]
2	RADIUS FILLER	2	0.15 7075-T6 [E]
3	BUSHING	2	NAS77A4

TABLE 1

Passenger/Crew Entry and Galley Door - Aft Upper Gate Lug Repair
Figure 9 (Sheet 1)

BOEING PROPRIETARY - Copyright © - Unpublished Work - See title page for details.

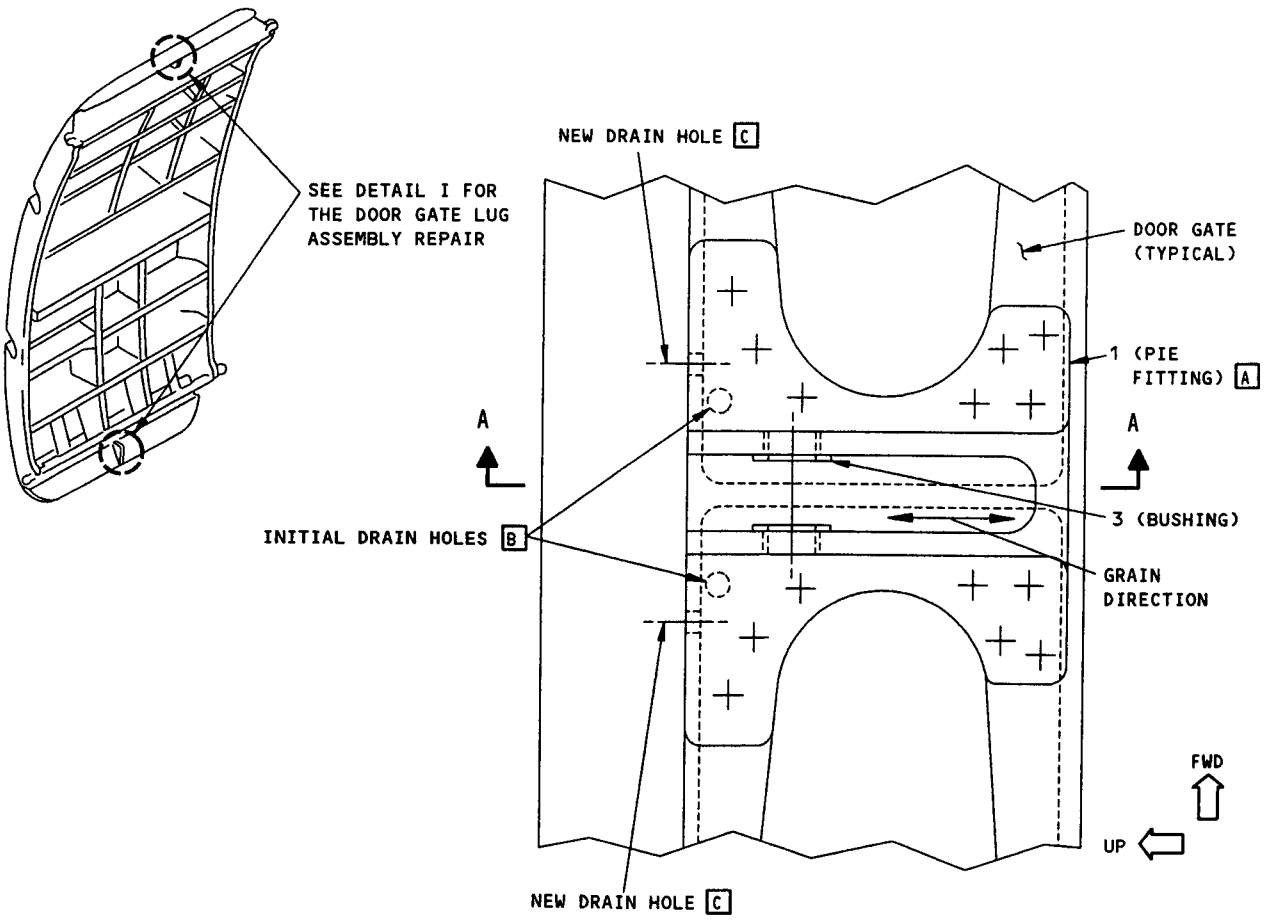

(UPPER GATE LUG ASSEMBLY SHOWN)
DETAIL I

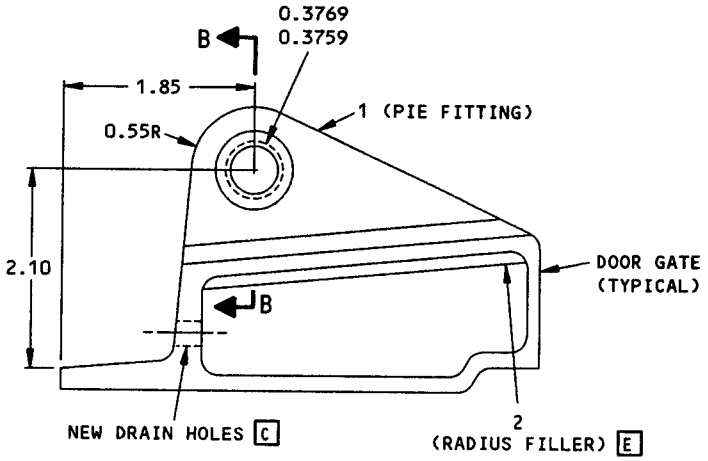

SECTION A-A
(FASTENERS NOT SHOWN)

Passenger/Crew Entry and Galley Door - Aft Upper Gate Lug Repair
Figure 9 (Sheet 2)

L56119

BOEING PROPRIETARY - Copyright © - Unpublished Work - See title page for details.

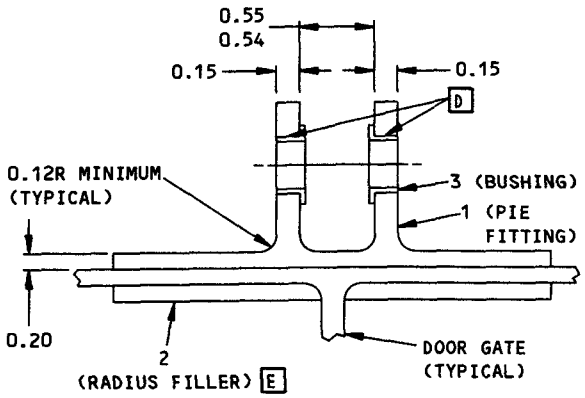

SECTION B-B
(FASTENERS NOT SHOWN)

Passenger/Crew Entry and Galley Door - Aft Upper Gate Lug Repair
Figure 9 (Sheet 3)

BOEING PROPRIETARY - Copyright © - Unpublished Work - See title page for details.

ITEM	CHORDS		WEB	
	MATERIAL	REPAIR FIG. NO.	MATERIAL	REPAIR FIG. NO.
1			.045 CLAD 2024-T42	52-10-2 Figs. 1&2
2			AZ91C COND HTA MAGNESIUM CASTING	
3			.040 CLAD 2024-T4	
4	BAC1490-2548 CLAD 7075-T6		.040 CLAD 2024-T4	
5	BAC1490-2630 CLAD 7075-T6		.040 CLAD 2024-T4	
6			.050 CLAD 7075-T6	51-40-3 Fig. 1
7	.040 CLAD 2024-T4	51-40-3 Fig. 1	.045 CLAD 7075-T6	51-40-3 Fig. 1
8	.040 CLAD 2024-T4	51-40-3 Fig. 1	.050 CLAD 7075-T6	51-40-3 Fig. 1
9			.056 CLAD 2024-T4	51-40-3 Fig. 1
10			356-T6 CASTING	
11	.040 CLAD 2024-T4	51-40-3 Fig. 1	.056 CLAD 7075-T6	51-40-3 Fig. 1
12			063 CLAD 7075-T6	51-40-3 Fig. 1
13			.050 CLAD 7075-T6	
14			.040 CLAD 2024-T3	
15			.032 CLAD 2024-T4	

Forward Entry Door Structure Identification
Figure 1 (Sheet 1 of 3)

ITEM	CHORDS		WEB	
	MATERIAL	REPAIR FIG. NO.	MATERIAL	REPAIR FIG. NO.
16	BAC1490-2630 CLAD 7075-T6			
17	AND10141-1402 7075-T6			
18	0.040 CLAD 2024-T4	51-40-3 Fig. 1	0.040 CLAD 7075-T6	51-40-3 Fig. 1
19			0.072 CLAD 7075-T6	
20			0.040 CLAD 7075-T6	
21			0.040 CLAD 2024-T4	52-10-2 Fig. 1 & 2
22	STOP FITTING 7079-T6			
23	STOP FITTING 7075-T73			
24	DOOR STOP FORGING 7079-T611			
25	DOOR STOP FORGING 7075-T73			
26	DOOR STOP BAC1542-842 2024-T4 or -T42			
27	DOOR STOP FORGING 2014-T6			
28	BAC 1505-100117 2024-T3511 EXTRUSION	51-40-4 Fig. 1	0.045 CLAD, 7075-T6,	51-40-3 Fig. 1

Forward Entry Door Structure Identification
Figure 1 (Sheet 2)

ITEM	CHORDS		WEB	
	MATERIAL	REPAIR FIG. NO.	MATERIAL	REPAIR FIG. NO.
29	BAC1505-100117 2024-T3511 EXTRUSION	51-40-4 Fig. 1	0.050 CLAD, 7075-T6	51-40-3 Fig. 1
30	BAC1505-100442 2024-T3511 EXTRUSION	51-40-4 Fig. 1	0.050 CLAD, 7075-T6	51-40-3 Fig. 1
31	BAC1505-100442 2024-T3511 EXTRUSION	51-40-4 Fig. 1	0.056 CLAD, 7075-T6	51-40-3 Fig. 1
32	BAC1505-100117 2024-T3511 EXTRUSION	51-40-4 Fig. 1	0.040 CLAD, 7075-T6	51-40-3 Fig. 1
33			0.070 CLAD, 2024-T4	51-40-3 Fig. 1

Forward Entry Door Structure Identification
Figure 1 (Sheet 2A)

NOTES

[A] FOR CUM LINE NUMBERS: 1 THRU 7, 9, 10, 493 AND ON

[B] FOR CUM LINE NUMBERS: 8, 11 THRU 492

[C] DELETED

[D] DELETED

[E] DELETED

[F] FORGINGS OF 7079-T6 HAVE BEEN REPLACED BY FORGINGS OF 7075-T73 IN PRODUCTION. 7075-T73 FORGINGS ARE RECOMMENDED WHEN EXISTING STOCKS OF 7079-T6 ARE EXHAUSTED

[G] FORGINGS OF 7079-T611 MATERIAL HAVE BEEN REPLACED BY FORGINGS OF 7075-T73 IN PRODUCTION. 7075-T73 FORGINGS ARE RECOMMENDED WHEN EXISTING STOCKS OF 7079-T611 ARE EXHAUSTED

[H] FOR FORWARD AND AFT STOPS

[I] FOR CUM LINE NUMBERS: 1 THRU 572

[J] FOR CUM LINE NUMBERS: 573 AND ON

REF DWG 50-7945

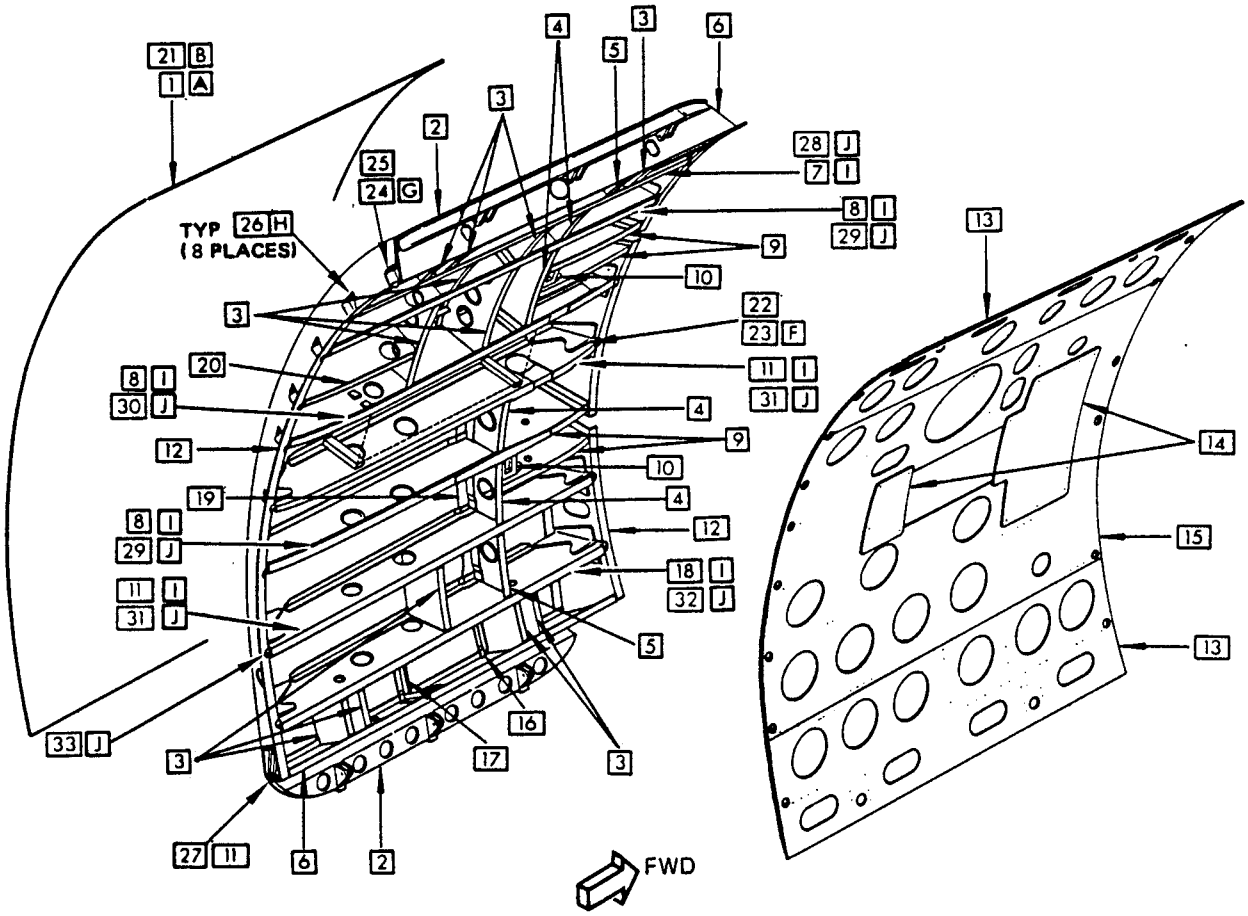

Forward Entry Door Structure Identification
Figure 1 (Sheet 3)

ITEM	CHORDS		WEB	
	MATERIAL	REPAIR FIG. NO.	MATERIAL	REPAIR FIG. NO.
1			.050 CLAD 2024-T3	
2			.056 CLAD 2024-T3	
3			.045 CLAD 2024-T3	52-10-2 Figs. 1&2
4			.071 CLAD 2024-T3	51-40-3 Fig. 1
5			MAGNESIUM ALLOY CASTING AZ91C-T6	
6	.056 CLAD 7075-T6		.045 CLAD 7075-T6	
7	BAC1505-100543 2024-T3	51-40-4 Fig. 1	.050 CLAD 7075-T6	51-40-3 Fig. 1
8	.056 CLAD 7075-T6	51-40-3 Fig. 1	.056 CLAD 7075-T6	51-40-3 Fig. 1
9			.063 CLAD 7075-T6	51-40-3 Fig. 1
10			.050 CLAD 7075-T6	
11	BAC1505-100543 2024-T3	51-40-4 Fig. 1	.056 CLAD 7075-T6	51-40-3 Fig. 1
12			.045 CLAD 7075-T6	51-40-3 Fig. 1
13			.036+.036 +.040 CLAD 2024-T3	
14			.071 CLAD 7075-T6	51-40-3 Fig. 1
15	BAC1505-100350 2024-T3	51-40-4 Fig. 1	.050 CLAD 7075-T6	51-40-3 Fig. 1

Aft Entry Door Structure Identification
Figure 2 (Sheet 1 of 4)

ITEM	CHORDS		WEB	
	MATERIAL	REPAIR FIG. NO.	MATERIAL	REPAIR FIG. NO.
16	BAC1506-1921 2024-T3	51-40-4 Fig. 1	0.071 CLAD 7075-T6	51-40-3 Fig. 1
17	BAC1506-1920 2024-T3	51-40-4 Fig. 1	0.050 CLAD 7075-T6	51-40-3 Fig. 1
18	BAC1505-100350 2024-T3	51-40-4 Fig. 1	0.045 CLAD 7075-T6	51-40-3 Fig. 1
19	BAC1506-1844 2024-T3	51-40-4 Fig. 1	0.050 CLAD 7075-T6	51-40-3 Fig. 1
20	BAC1506-1922 2024-T3	51-40-4 Fig. 1	0.056 CLAD 7075-T6	51-40-3 Fig. 1
21	BAC1506-1922 2024-T3	51-40-4 Fig. 1	0.050 CLAD 7075-T6	51-40-3 Fig. 1
22			0.040 CLAD 7075-T6	
23			0.050 CLAD 2024-T4	
24			0.040 CLAD 2024-T4	

NOTES

A FOR CUM LINE NUMBERS:
6, 8, 12, 14, 16, 18, 19, 21, 22, 24, 25, 27, 28, 30, 31

B FOR AIRPLANES WITHOUT AFT AIR-STAIRS NOT LISTED IN A

C BONDED SKINS

Aft Entry Door Structure Identification
Figure 2 (Sheet 2)

EFFECTIVITY
FOR AIRPLANES WITHOUT AFT AIRSTAIRS

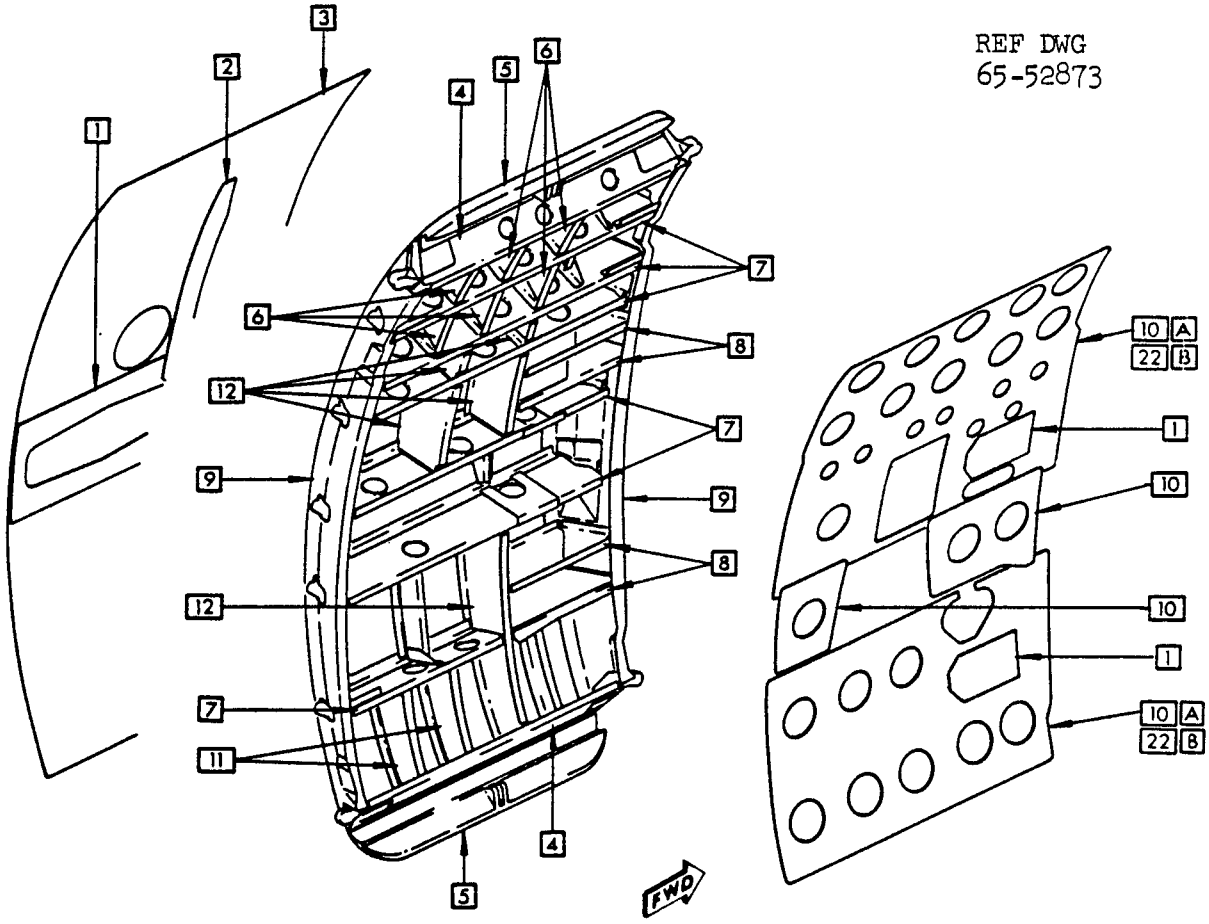

Aft Entry Door Structure Identification
Figure 2 (Sheet 3 of 4)

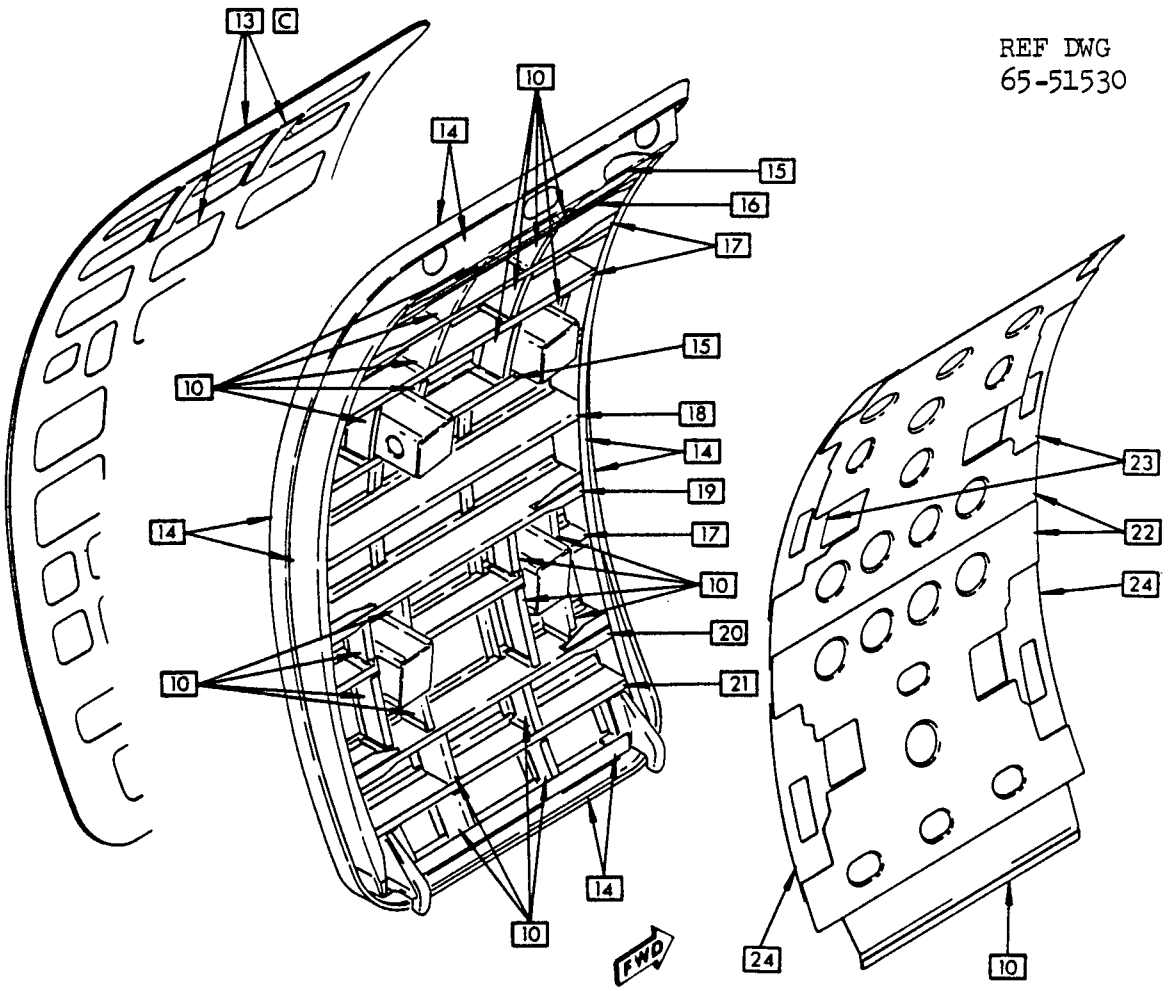

Aft Entry Door Structure Identification
Figure 2 (Sheet 4 of 4)

ITEM	UPPER CHORD		WEB OR FORMED SECTION		LOWER CHORD	
	MATERIAL	REPAIR FIG. NO.	MATERIAL	REPAIR FIG. NO.	MATERIAL	REPAIR FIG. NO.
1	BAC1510-785 7075-T6511		.040 7075-T6		BAC1504-8181 7075-T6511	
2	BAC1510-785 7075-T6511		.032 7075-T6		AND10133-1402 7075-T6511	
3	BAC1510-785 7075-T6511		.025 CLAD 7075-T6		AND10133-1402 7075-T6511	
4	BAC1501-100019 7075-T6					
5	BAC1501-100031 7075-T6					
6	BAC1501-1605 7075-T6					
7	BAC1501-2802 7075-T6					
8	QQ-A-596 356-T6					
9	.020+.020 CLAD 2024-T3					
10	.040 CLAD 2024-T3					
11	.016+.020 CLAD 2024-T3					

Aft Airstair Structure Identification
Figure 3 (Sheet 1 of 2)

REF DWG
65-56632

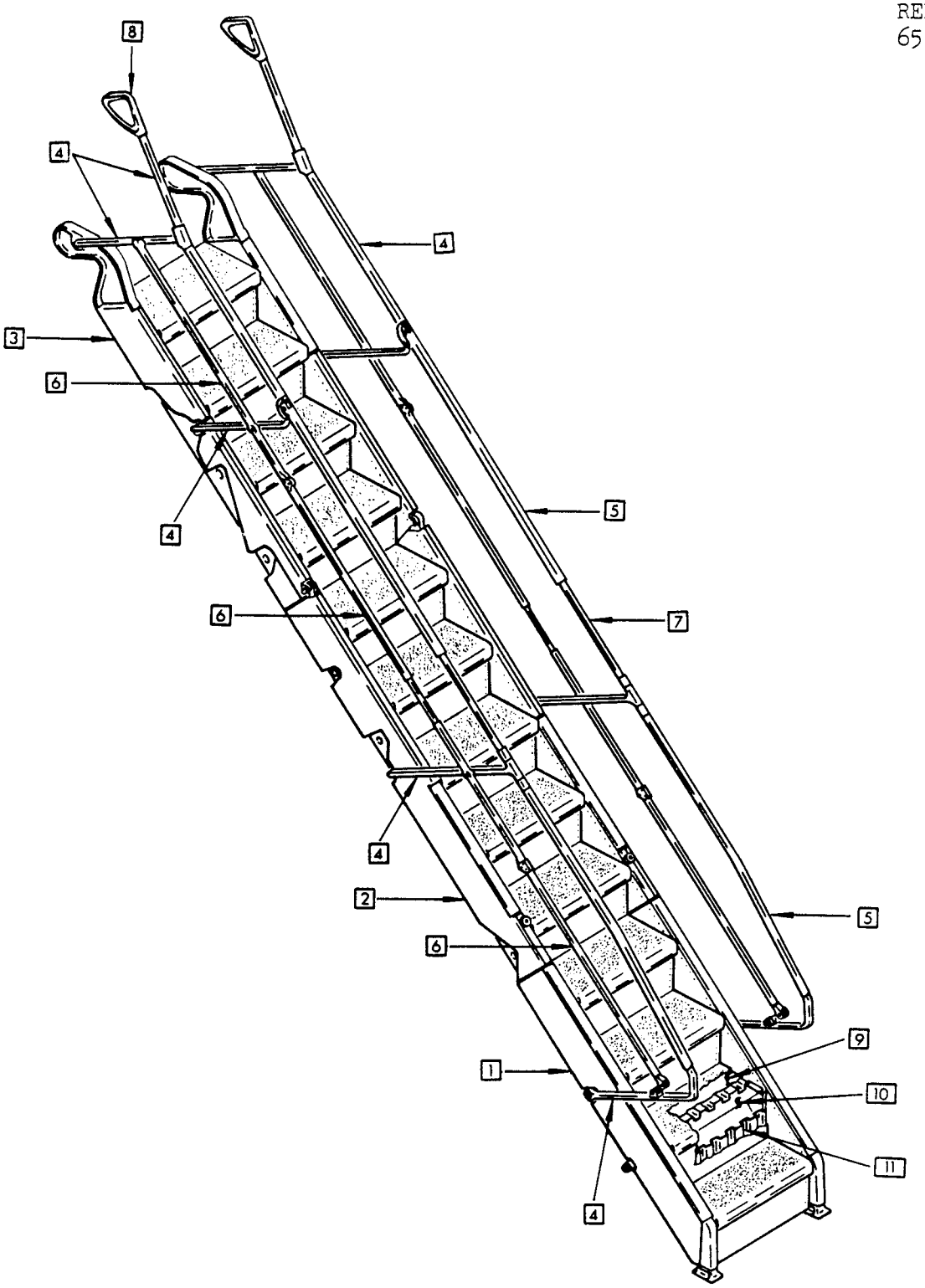

Aft Airstair Structure Identification
Figure 3 (Sheet 2)

FIGURE 1 DELETED. SEE 52-00-3, FIGURE 2 FOR REPAIR DATA.

Door Skin Between Beams - Flush Repair
Figure 1

FIGURE 2 DELETED. SEE 52-00-3, FIGURE 3 FOR REPAIR DATA.

Flush Repair - Door Skin Across Beams
Figure 2

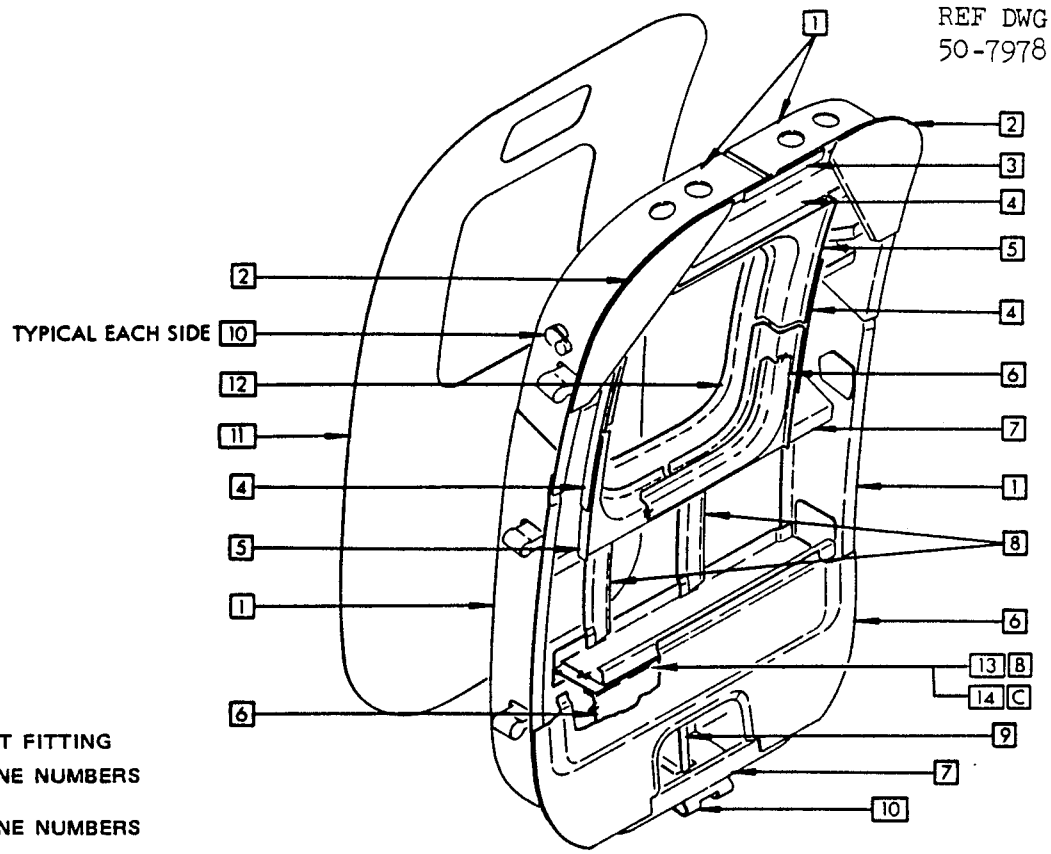

NOTES

A ATTACHMENT FITTING

B FOR CUM LINE NUMBERS 1 THRU 624

C FOR CUM LINE NUMBERS 625 AND ON

ITEM	MATERIAL	REPAIR FIG. NO.
1	0.063 CLAD 7075–T6	51–40–3 FIG 1
2	0.050 CLAD 7075–T6	51–40–3 FIG 1
3	0.063 CLAD 2024–T3	
4	0.080 CLAD 7075–T6	51–40–3 FIG 1
5	0.090 CLAD 7075–T6	51–40–3 FIG 1
6	0.063 CLAD 2024–T4	
7	0.063 CLAD 7075–T6	51–40–3 FIG 1
8	AND 10141–1402 7075–T6	
9	0.056 CLAD 7075–T6	
10	17-4 PH STAINLESS STEEL A	

ITEM	MATERIAL	REPAIR FIG. NO.
11	0.045 CLAD 2024–T3	52–10–2 FIG 1&2
12	0.071 CLAD 7075–T6	
13	INNER CHORD BEAM 0.063 CLAD 7075–T6	51–40–3 FIG 1
	OUTER CHORD BEAM BAC 1050–101134 7075–T6511	51–40–3 FIG 1
14	BEAM 0.063 CLAD 7075–T6	51-40-3 FIG 1
	OUTER ANGLE DOUBLER 0.063 CLAD 7075–T6	51–40–3 FIG 1

Emergency Hatch Structure Identification
Figure 1

ITEM	INBOARD CHORD		WEB OR FORMED SECTION		OUTBOARD CHORD	
	MATERIAL	REPAIR FIG. NO.	MATERIAL	REPAIR FIG. NO.	MATERIAL	REPAIR FIG. NO.
1			FORGED BLOCK 7079-T611 (OPTIONAL: PLATE 7079-T651 OR EXTRUDED BAR 7079-T6511			
2			0.056 CLAD 7075-T6	51-40-3 Fig. 1 P		
3	BAC1490-2529 CLAD 7075-T6				BAC1505-100044 7075-T6	
4			0.063 CLAD 7075-T6		BAC1506-1155 7075-T6	
5	BAC1490-2522 7075-T6	51-40-3 Fig. 1	0.050 CLAD 7075-T6	51-40-3 Fig. 1 P	BAC1505-100570 2024-T3	51-40-4 Fig. 1 P
6			BAC1506-1155 7075-T6			
7	BAC1490-2773 7075-T6	51-40-3 Fig. 1	0.050 CLAD 7075-T6	51-40-3 Fig. 1	BAC1505-100570 2024-T3	51-40-4 Fig. 1
8			BAC1503-1430 7075-T6			
9			0.050 CLAD 7075-T6			
10			0.040 CLAD 7075-T6			
11			0.032 CLAD 7075-T6			
12			0.090 CLAD 7075-T6			
13			0.063 CLAD 7075-T6			
14			0.040 CLAD 2024-T3			

LIST OF MATERIALS FOR DETAILS I AND II

Forward Cargo Door Structure Identification
Figure 1 (Sheet 1)

BOEING PROPRIETARY - Copyright © - Unpublished Work - See title page for details.

	INBOARD CHORD		WEB OR FORMED SECTION		OUTBOARD CHORD	
ITEM	MATERIAL	REPAIR FIG. NO.	MATERIAL	REPAIR FIG. NO.	MATERIAL	REPAIR FIG. NO.
15	0.063 CLAD 7075-T6				0.056 CLAD 7075-T6	
16			0.050 CLAD 7075-T6		BAC1505-100044 7075-T6	
17			OUTER SKIN: 0.036 CLAD 2024-T3 SKIN DOUBLER: 0.036 CLAD 2024-T3	52-30-2 Fig. 3		
18	BAC1503-1509 7075-T6				BAC1506-1155 7075-T6	
19			0.032 CLAD 2024-T3			
20			FORGING 7079-T6 (OPTIONAL: DIE FORGING 7075-T73)			
21			0.063 2024-T42	51-40-3 Fig. 1 P		
22			FORGED BLOCK 7079-T611 (OPTIONAL: PLATE 7079-T651 OR EXTRUDED BAR 7079-T6511 OR FORGED BLOCK 7075-T73)			
23			FORGED BLOCK 7075-T73			
24			DIE FORGING 7075-T73			
25	0.063 CLAD 7075-T6				0.063 CLAD 7075-T6	
26			0.090 CLAD 7075-T6			
27			BAC1520-1827 7075-T73 (OPTIONAL: PLATE 7075-T73)			

LIST OF MATERIALS FOR DETAILS I AND II (CONT)

Forward Cargo Door Structure Identification
Figure 1 (Sheet 2)

BOEING PROPRIETARY - Copyright © - Unpublished Work - See title page for details.

NOTES

- [A] ATTACHMENT FITTING
- [B] BONDED SKINS
- [C] FOR CUM LINE NUMBERS: 1 THRU 32
- [D] FOR CUM LINE NUMBERS: 33 AND ON
- [E] FOR CUM LINE NUMBERS: 1 THRU 358, 368, 371, 396, 401
- [F] FOR AIRPLANES NOT LISTED IN [E]
- [G] FOR AIRPLANES NOT LISTED IN [H]
- [H] FOR CUM LINE NUMBERS: 1236 AND ON
- [I] FOR CUM LINE NUMBERS: 1 THRU 266, 269, 271 THRU 273, 292
- [J] FOR CUM LINE NUMBERS: 267, 268, 270, 274 THRU 291, 293 THRU 358, 368, 371, 396, 401

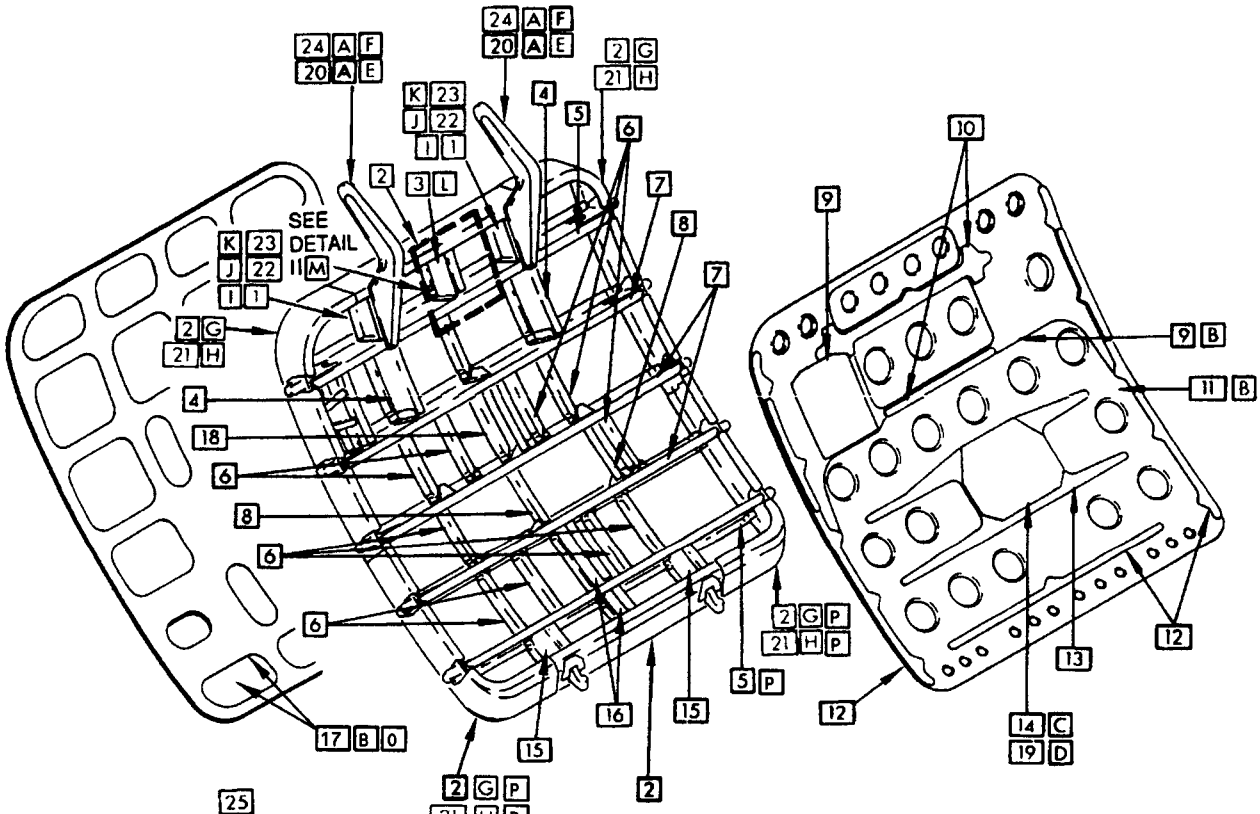

DETAIL I

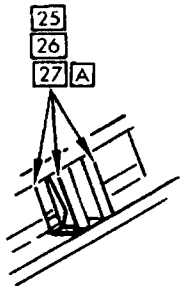

DETAIL II [M]

- [K] FOR AIRPLANES NOT LISTED IN [I] AND [J]
- [L] FOR CUM LINE NUMBERS: 1 THRU 266, 269, 271 THRU 273, 292
- [M] FOR AIRPLANES NOT LISTED IN [L]
- [N] FOR CUM LINE NUMBERS: 1 THRU 1000 WITH PREVENTIVE MODIFICATION OF SB 737-52-1090 INCORPORATED
- [O] THE OUTER SKIN AND SKIN DOUBLER CAN BE REPLACED WITH ONE PIECE OF 0.071 INCH THICK CLAD 2024-T3.
- [P] REFER TO SB 52A1100 FOR DOOR FRAME LOWER CORNER AND LOWER BEAM REPAIRS.

Forward Cargo Door Structure Identification
Figure 1 (Sheet 3)

BOEING PROPRIETARY - Copyright © - Unpublished Work - See title page for details.

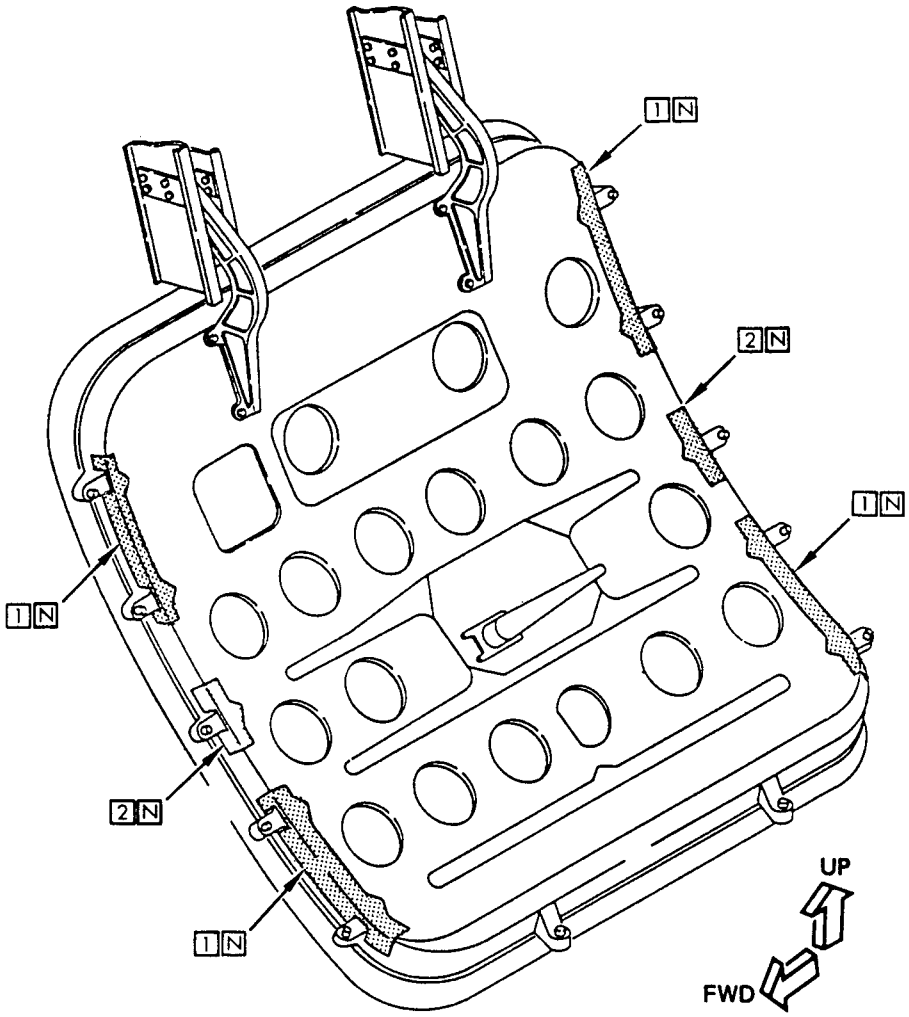

DETAIL III

ITEM	INBOARD CHORD		WEB OR FORMED SECTION		OUTBOARD CHORD	
	MATERIAL	REPAIR FIG. NO.	MATERIAL	REPAIR FIG. NO.	MATERIAL	REPAIR FIG. NO.
1			0.063 2024-T42			
2			0.063 2024-T42			

LIST OF MATERIALS FOR DETAIL III

Forward Cargo Door Structure Identification
Figure 1 (Sheet 4)

	INBOARD CHORD		WEB OR FORMED SECTION		OUTBOARD CHORD	
ITEM	MATERIAL	REPAIR FIG. NO.	MATERIAL	REPAIR FIG. NO.	MATERIAL	REPAIR FIG. NO.
1			0.063 CLAD 7075-T6	51-40-3 Fig. 1 I		
2	FORGING 7079-T6 OR 7075-T73					
3	0.063 CLAD 7075-T6	51-40-3 Fig. 1	0.050 CLAD E 7075-T6 0.063 CLAD G 7075-T6	51-40-3 Fig. 1 I	BAC1505-100570 2024-T4	51-40-4 I
4	BAC1503-100033 7075-T6		0.063 CLAD 7075-T6		AND10136-1604 7075-T6	
5	0.071 CLAD 7075-T6	51-40-3 Fig. 1	0.050 CLAD 7075-T6	51-40-3 Fig. 1	BAC1505-100570 2024-T4	51-40-4
6			0.050 CLAD 7075-T6			
7			0.040 CLAD 7075-T6			
8			0.032 CLAD 7075-T6			
9			0.056 CLAD 7075-T6			
10	BAC1506-377 7075-T6		0.050 CLAD 7075-T6		AND10136-1604 7075-T6	
11			0.040 CLAD 7075-T6		BAC1505-100044 7075-T6	
12			0.050 CLAD 7075-T6		BAC1505-100044 7075-T6	
13			OUTER SKIN: 0.036 CLAD 2024-T3 SKIN DOUBLER: 0.036 CLAD 2024-T3	52-30-2 Fig. 3		
14			0.040 CLAD 2024-T3			
15			0.032 CLAD 2024-T3			
16			0.025 AISI 4130 STEEL			

Aft Cargo Door Structure Identification
Figure 2 (Sheet 1)

BOEING PROPRIETARY - Copyright © - Unpublished Work - See title page for details.

REF DWG
65-47952

NOTES

[A] ATTACHMENT FITTING

[B] BONDED SKINS

[C] FOR CUM LINE NUMBERS: 1 THRU 32

[D] FOR CUM LINE NUMBERS: 33 AND ON

[E] FOR CUM LINE NUMBERS: 1 THRU 873

[F] FORGINGS OF 7079-T6 HAVE BEEN REPLACED BY FORGINGS OF 7079-T73 IN PRODUCTION. 7075-T73 FORGINGS ARE RECOMMENDED FOR REPLACEMENT WHEN STOCKS OF 7079-T6 ARE EXHAUSTED.

[G] FOR CUM LINE NUMBERS 874 AND ON.

[H] THE OUTER SKIN AND SKIN DOUBLER CAN BE REPLACED WITH ONE PIECE OF 0.071 INCH THICK CLAD 2024-T3.

[I] FOR CUM LINE NUMBERS: 06 THRU 1585 REFER TO SB 737-52A1079 DOOR FRAMES AND LOWER AND UPPER CROSS BEAMS REPAIR.

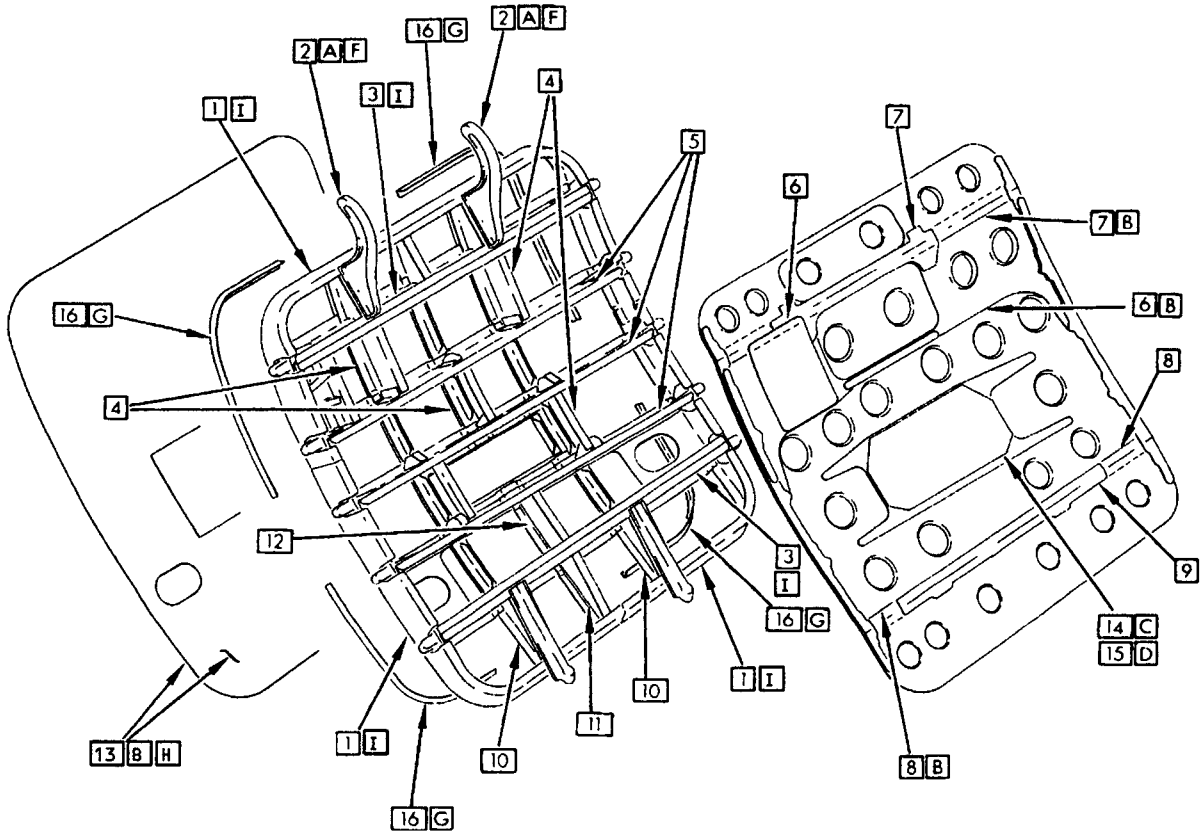

Aft Cargo Door Structure Identification
Figure 2 (Sheet 2)

BOEING PROPRIETARY - Copyright © - Unpublished Work - See title page for details.

ITEM	MATERIAL	REPAIR FIG. NO.
1	0.056 7075-T6 CLAD	51-40-3 Fig. 1
2	BAC1506-2039 7075-T6	51-40-4 Fig. 1
3	BAC1506-2038 7075-T6	51-40-4 Fig. 1
4	BAC1517-1561 7075-T6 CLAD	51-40-3 Fig. 1
5	0.063 7075-T6 CLAD	51-40-3 Fig. 1
6	AND10134-1206 7075-T6	
7	0.100 7075-T6 CLAD	
8	BAC1506-2045 7075-T6511	
9	CRES SHT 17-7PH 0.080 ANNEALED COND 2	
10	4340 STEEL BAR PER BMS 7-28	
11	BAC1517-1471 7075-T6511	51-40-4 Fig. 1
12	0.040 2024-T3	52-10-2 Fig. 1 & 2 52-30-2 Fig. 1
13	0.050 2024-T3	52-10-2 Fig. 1 & 2
14	0.032 7075-T6 CLAD	
15	BAC1510-799 7075-T6511	51-40-4 Fig. 1
16	BAC1520-1696 7075-T6511	
17	0.050 CLAD 7075-T6	
18	0.040 CLAD 7075-T6	
19	0.090 CLAD 7075-T6	51-40-3 Fig. 1
20	0.036 CLAD OPT: 0.040 CLAD 2024-T3	
21	0.036 CLAD 2024-T3	
22	BAC1493-526 CLAD 2024-742 OPT: 0.050 CLAD 2024-T3	
23	DOUBLER ASSY 0.020 CLAD 2024-T3 0.056 CLAD 2024-T3	
24	0.056 CLAD 2024-T3	
25	BAC1490-2788 CLAD 7075-T6	
26	0.063 7075-T6	
27	0.063 7075-T6	
28	BAC1512-3345	

Main Cargo Door Structure Identification
Figure 3 (Sheet 1)

NOTES

[A] FOR 737-200C UP TO CUM LINE NUMBER 173

[B] FOR AIRPLANES NOT LISTED IN [A]

[C] FOR 737-200C CUM LINE NUMBERS 321 AND ON

[D] FOR AIRPLANES NOT LISTED IN [C]

[E] FOR AIRPLANES WITH SB 52A1038 INCORPORATED

[F] FOR AIRPLANES WITH SB 52-1068 INCORPORATED

Main Cargo Door Structure Identification
Figure 3 (Sheet 2)

EFFECTIVITY
737-200C AIRPLANES

REF DWG
65-54936

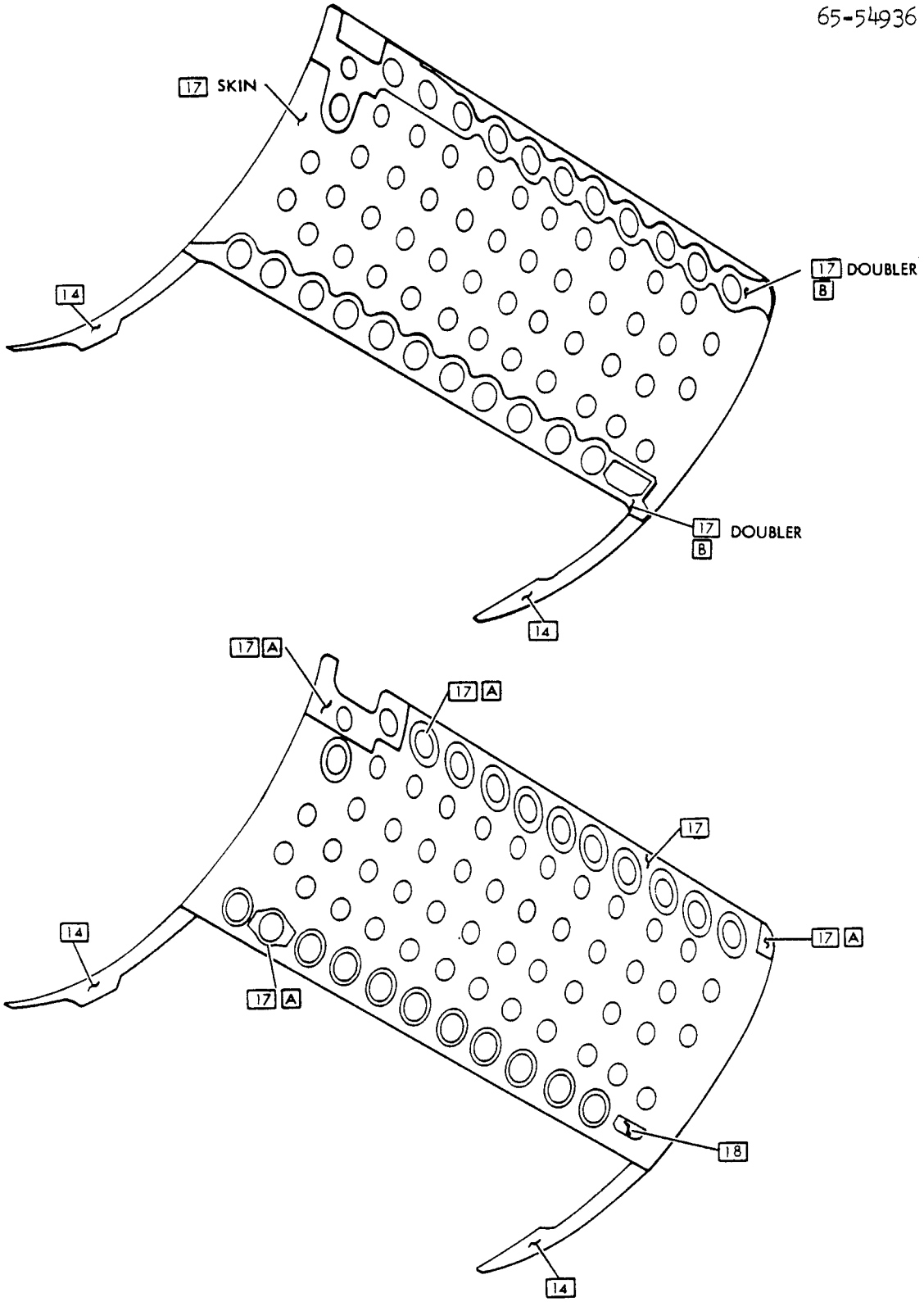

Main Cargo Door Structure Identification
Figure 3 (Sheet 3)

REF DWG
65-54916

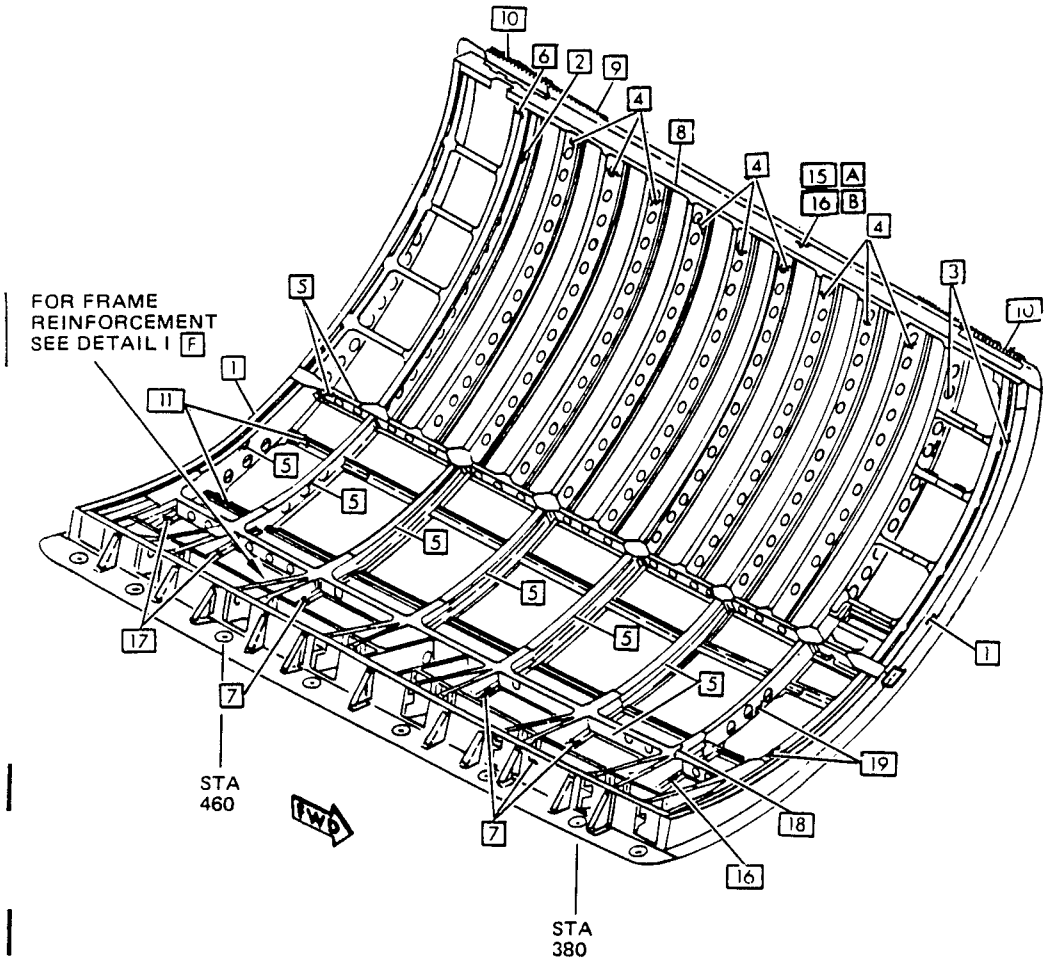

Main Cargo Door Structure Identification
Figure 3 (Sheet 4)

EFFECTIVITY
737-200C AIRPLANES

REF DWG
65-54916

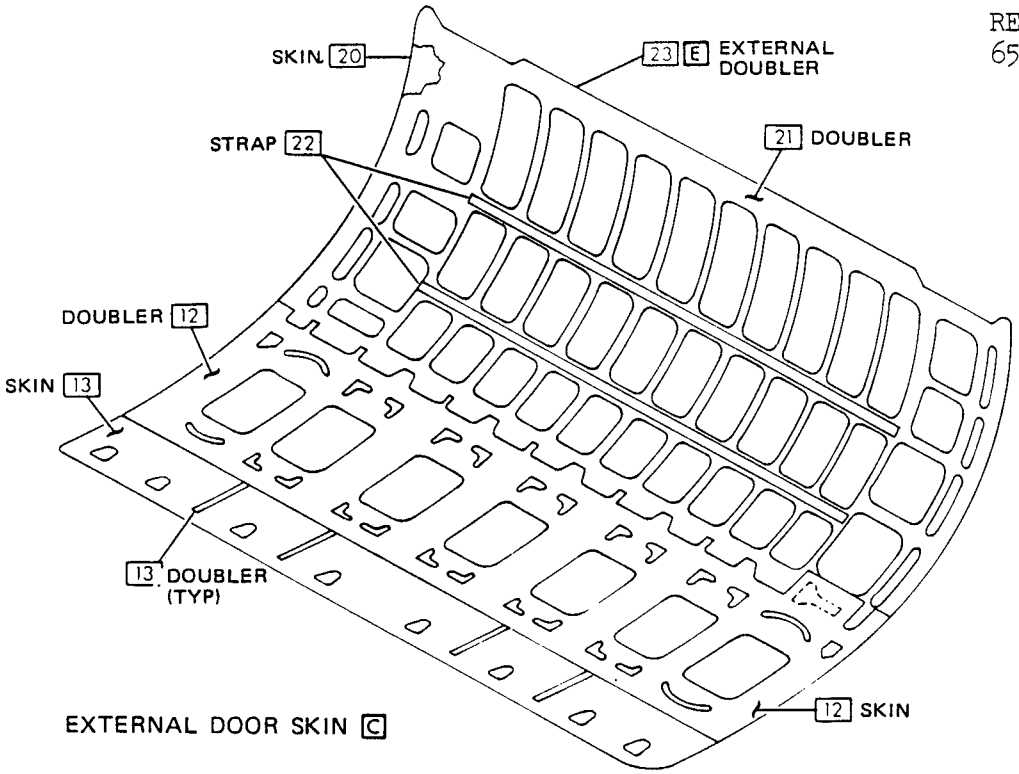

EXTERNAL DOOR SKIN C

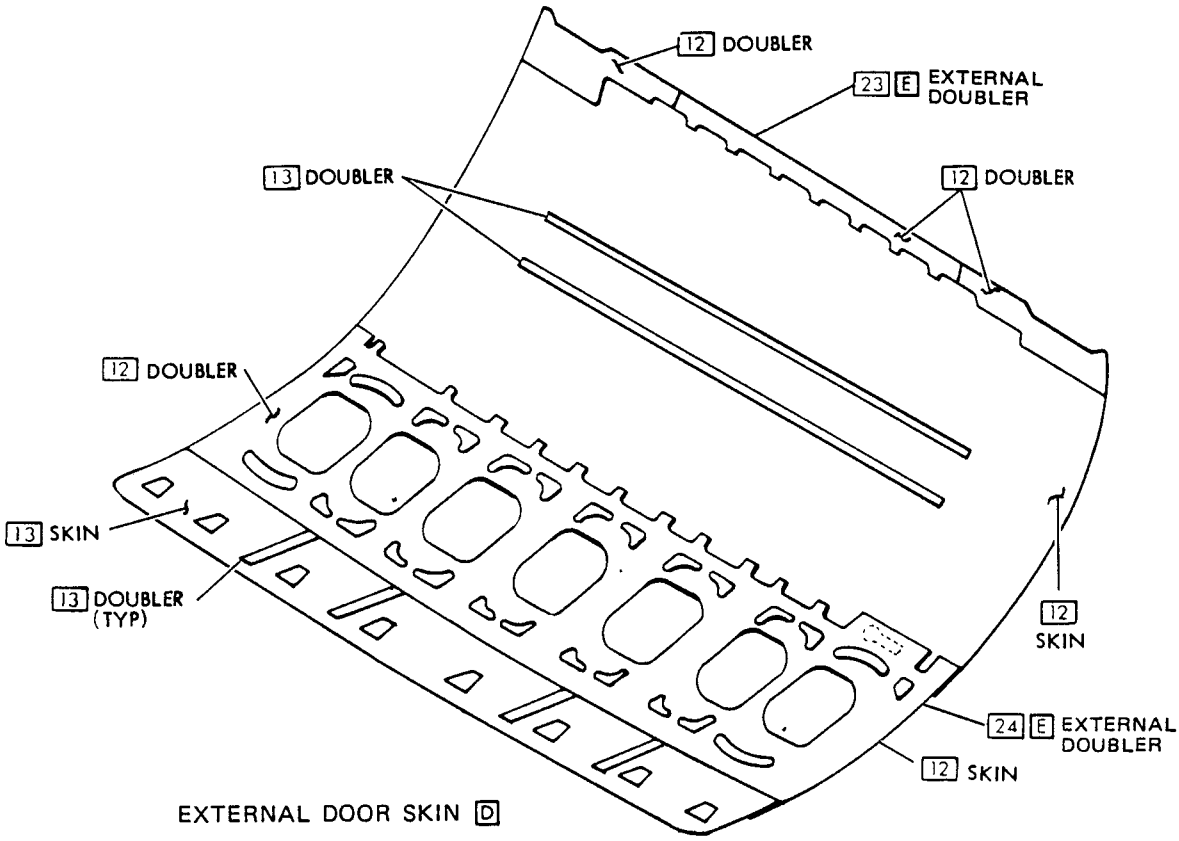

EXTERNAL DOOR SKIN D

Main Cargo Door Structure Identification
Figure 3 (Sheet 5)

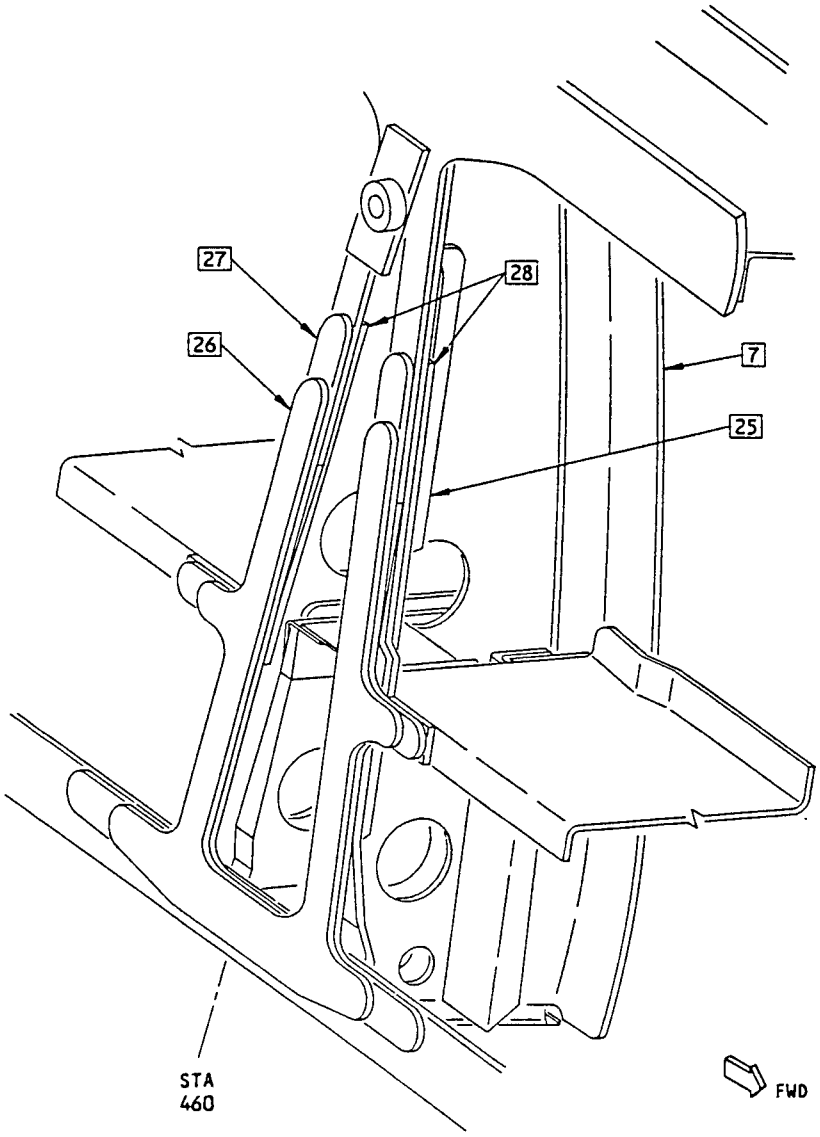

STATION 460 FRAME REINFORCEMENT
(STATIONS 380, 400, 420, 440 SIMILAR)
DETAIL I

Main Cargo Door Structure Identification
Figure 3 (Sheet 6)

SERVICE BULLETIN REPAIRS - CARGO DOORS

The following service bulletins contain cargo door repairs which are available for use where specific damage has been encountered. Usually, the service bulletin also covers preventive modification data which operators are encouraged to use to eliminate the need for repair.

DAMAGED AREA	CUM LINE NUMBER EFFECTIVITY [A]	SB NUMBER
DOORS - FORWARD AND AFT CARGO DOOR STOP FITTINGS INSPECTION AND REPLACEMENT	1 THRU 514	737-52-1065
AFT CARGO DOOR FRAME AND BEAM INSPECTION, REPAIR AND MODIFICATION	6 THRU 1585	737-52A1079
FORWARD CARGO DOOR MODIFICATION	1 THRU 1000	737-52-1090
MAIN CARGO - LOWER BEAM INSPECTION, REPAIR OR MODIFICATION	ALL 737-200C AND QC SERIES AIRPLANES FROM CUM LINE NO. 72 THRU CUM LINE NO. 1113 FOR A TOTAL OF 99 AIRPLANES	737-52-1093
MAIN CARGO - FRAME REINFORCEMENT INSPECTION, REPAIR OR MODIFICATION	ALL 737-200C SERIES AIRPLANES WITH MAIN CARGO DOOR MADE BEFORE CUM LINE NUMBER 514	737-52-1068
MAIN CARGO - SKIN INSPECTION AND DOUBLER INSTALLATION	72 THRU 311	737-52A1038
FORWARD CARGO DOOR - LOWER FORWARD AND AFT CORNER INSPECTION, MODIFICATION AND REPLACEMENT	ALL	737-52A1100

[A] FOR AIRPLANES ON WHICH PREVENTIVE MODIFICATION HAS NOT BEEN ACCOMPLISHED.

BOEING PROPRIETARY - Copyright © - Unpublished Work - See title page for details.

REPAIR INSTRUCTIONS

1. Remove lining as required to gain access to the damaged area.
2. Drill 0.25 inch diameter stop holes at the ends of cracks that do not end in a fastener hole.
3. Remove all burrs, nicks, scratches, sharp edges and corners from repair parts and trimmed initial parts.
4. Remove the initial rivets in structure as required.
5. Make repair plates. Find and drill the fastener holes. Chamfer the edges to the dimensions shown in Detail II.
6. Install the countersink repair washers.
7. Prepare the mating surfaces of the door skin and repair plates [1] and [2] for bonding as given in SRM 51-40-5.
8. Install the repair parts and fasteners and bond as given in SRM 51-40-5.
9. Put back the initial finish.
10. Replace the door lining.

NOTES

- THIS REPAIR WILL NOT HAVE AN EFFECT ON A STRUCTURALLY SIGNIFICANT ITEM (SSI) GIVEN IN SRM 51-00-4, FIG. 3. THUS, NO CHANGE TO THE SUPPLEMENTAL STRUCTURAL INSPECTION DOCUMENT (SSID) INSPECTION PROGRAM IS NECESSARY.
- THIS REPAIR IS APPLICABLE TO ALL WINDOWS IN THE MAIN CARGO DOOR. MODIFY TO SUIT LOCATION.
- WHEN YOU DO THIS REPAIR, REFER TO:
  - AMM 51-21 FOR THE FINISH
  - SRM 51-10-2 PROTECTIVE TREATMENT OF METAL
  - SRM 51-30 FASTENER CODE, REMOVAL AND INSTALLATION, HOLE SIZES AND EDGE MARGINS
  - SRM 51-30-8 INSTALLATION OF COUNTERSINK REPAIR WASHERS
  - SRM 51-40-5 BONDED METAL STRUCTURAL REPAIR
  - SRM 51-70 AERODYNAMIC SMOOTHNESS REQUIREMENTS.

FASTENER SYMBOLS

+ INITIAL FASTENER LOCATIONS

⊕ REPAIR FASTENER LOCATIONS. ONE ROW OF BACDR15CE5D IS REQUIRED AROUND DAMAGE.

REPAIR FASTENER LOCATIONS. ONE ROW OF BACDR15CE6D IS REQUIRED ON EDGE OF PART [2].

[A] USE SAME DIAMETER AND TYPE AS THE INITIAL FASTENER.

[B] KEEP A 0.65 INCH TO 1.15 INCH SPACING FOR THE REPAIR FASTENERS.

REPAIR MATERIAL			
PART		QTY	MATERIAL
[1]	PLATE	1	0.036 INCH CLAD 2024-T3
[2]	PLATE	1	0.040 INCH CLAD 2024-T3

Main Cargo Door Skin Repair at Window
Figure 1 (Sheet 1)

BOEING PROPRIETARY - Copyright © - Unpublished Work - See title page for details.

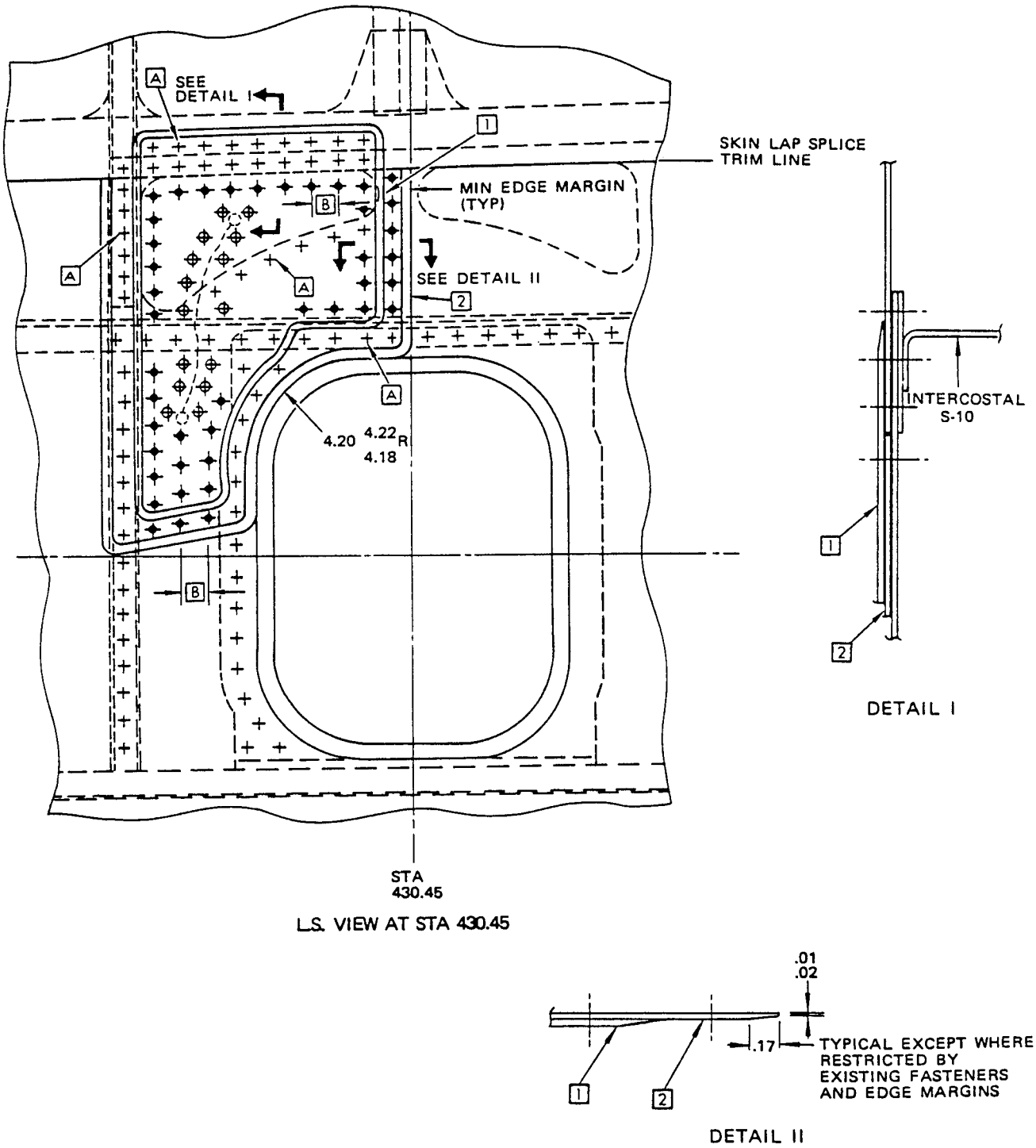

Main Cargo Door Skin Repair at Window
Figure 1 (Sheet 2)

FIGURE 2 DELETED. SEE SB 737-52-1093 FOR REPAIR DATA.

Main Cargo Door Beam Repair
Figure 2

BOEING PROPRIETARY - Copyright © - Unpublished Work - See title page for details.

APPLICABILITY

THIS REPAIR IS APPLICABLE TO THE OUTER SKIN OF THE FORWARD AND AFT CARGO DOORS

REPAIR INSTRUCTIONS

1. Get access to the damaged area.
2. Remove the damaged outer skin of the door. Remove fasteners as necessary.
3. Make the repair part. See Table I.
4. Assemble the repair part and drill the fastener holes through the initial fastener locations in the skin.
5. Disassemble the repair part.
6. Remove the nicks, scratches, gouges, burrs, and sharp edges from the repair part.
7. Apply a chemical conversion coating to the repair part. Refer to SRM 51-10-2.
8. Apply two layers of BMS 10-11, Type I primer to the mating surface of the repair part. Refer to SOPM 20-41-02.
9. Install the repair part with BMS 5-95 sealant between the mating surfaces.
10. Install the fasteners. Fasteners that are not made of aluminum must be installed wet with BMS 5-95 sealant.
11. Apply one layer of BMS 10-79, Type III finish to the external surface of the repair area. Refer to SOPM 20-44-04.

NOTES

- THIS REPAIR WILL HAVE AN EFFECT ON THE STRUCTURALLY SIGNIFICANT ITEM (SSI) NUMBER F-1, BUT THE INSPECTION THAT IS NECESSARY FOR F-1 IS STILL APPLICABLE. THEREFORE, NO CHANGE TO THE SUPPLEMENTAL STRUCTURAL INSPECTION DOCUMENT (SSID) INSPECTION PROGRAM IS NECESSARY. REFER TO SRM 51-00-4, FIG. 3 FOR THE APPLICABLE SSI DATA.
- USE FASTENERS THAT ARE THE SAME TYPE AND DIMENSIONS AS THE INITIAL FASTENERS. IF A FASTENER HOLE IS DAMAGED, USE A 1/32 OVERSIZE FASTENER.
- WHEN YOU USE THIS REPAIR, REFER TO:
  - SOPM 20-41-02 AND SOPM 20-44-04 FOR THE APPLICATION OF FINISHES
  - SRM 51-10-1 FOR DAMAGE CLASSIFICATION
  - SRM 51-10-2 FOR PROTECTIVE TREATMENT OF METALLIC AND GRAPHITE MATERIALS
  - SRM 51-20-4 FOR REPAIR SEALING
  - SRM 51-30 FOR FASTENER CODE, INSTALLATION AND REMOVAL, HOLE SIZES, AND EDGE MARGINS.

[A] THE CONTOUR OF THE PART 1 OUTER SKIN MUST BE THE SAME AS THE CONTOUR OF THE INITIAL OUTER SKIN OF THE DOOR.

[B] THE FINISH ON THE EDGES MUST BE 125 MICROINCHES Ra OR SMOOTHER.

REPAIR MATERIAL			
PART		QTY	MATERIAL
1	OUTER SKIN	1	0.071 INCH CLAD 2024-T3 [A] [B]

TABLE I

Cargo Door Outer Skin Repair
Figure 3 (Sheet 1)

BOEING PROPRIETARY - Copyright © - Unpublished Work - See title page for details.

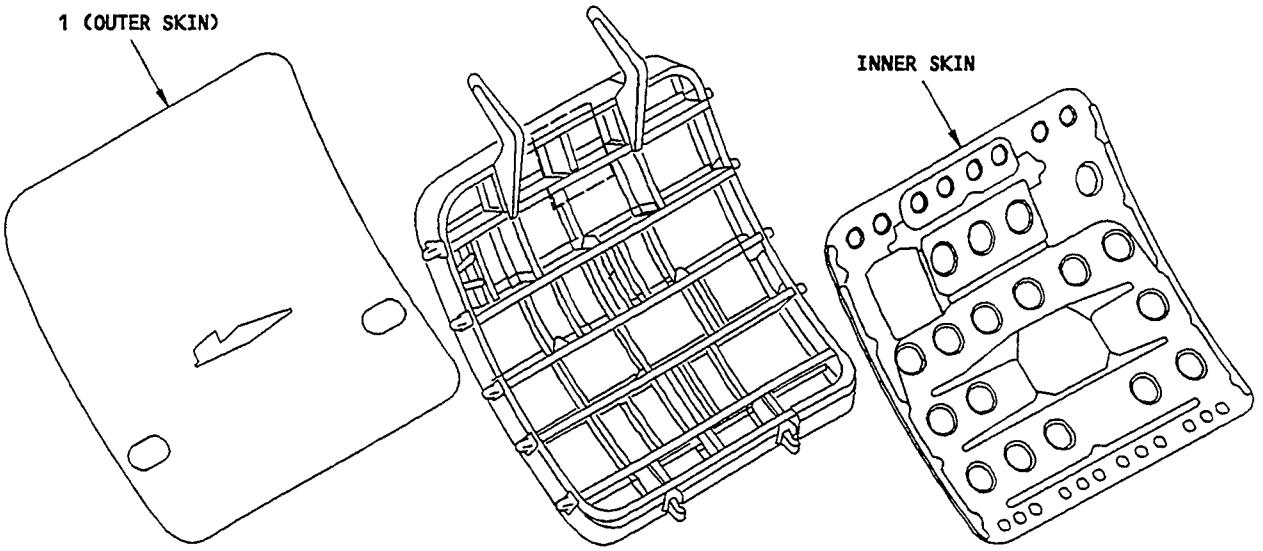

DETAIL I
FORWARD CARGO DOOR

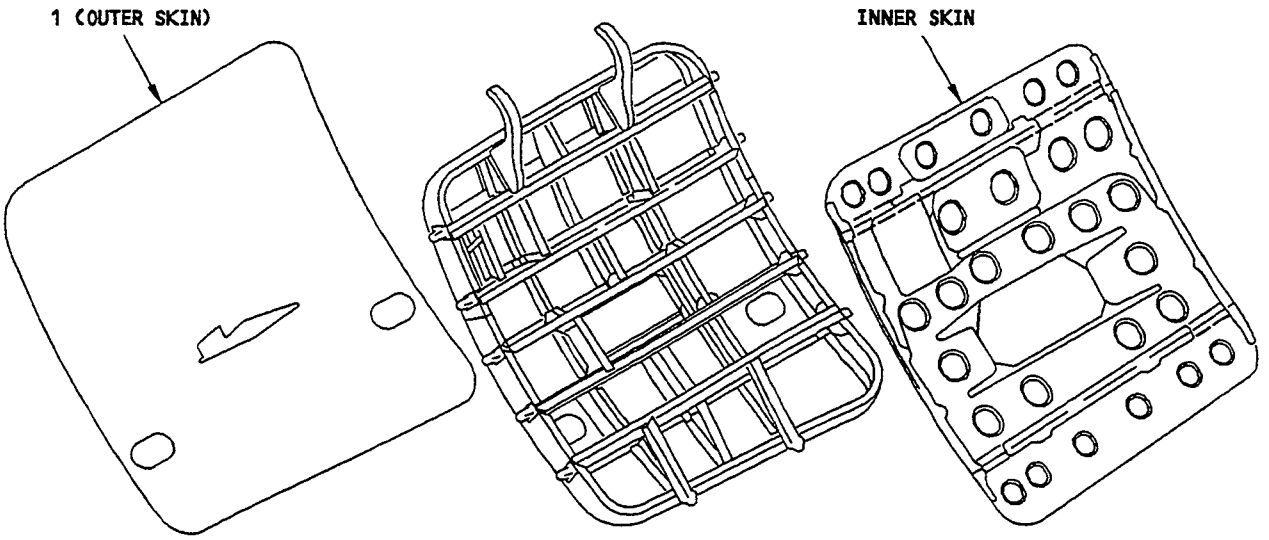

DETAIL II
AFT CARGO DOOR

Cargo Door Outer Skin Repair
Figure 3 (Sheet 2)

ITEM	CHORDS		WEB	
	MATERIAL	REPAIR FIG. NO.	MATERIAL	REPAIR FIG. NO.
1			0.056 CLAD 2024-T3	
2			0.050 CLAD 2024-T3	
3			0.045 CLAD 2024-T3	52-10-2 Fig. 1&2
4	0.071 CLAD 7075-T6	51-40-3 Fig. 1		
5	MAGNESIUM ALLOY CASTING AZ91C-T6			
6	BAC1505-100117 2024-T3511		0.045 CLAD 7075-T6	
7	BAC1505-100543 2024-T3511	51-40-4	0.050 CLAD 7075-T6	51-40-3 Fig. 1
8	0.056 CLAD 7075-T6	51-40-3 Fig. 1		
9			0.050 CLAD 7075-T6	
10			0.045 CLAD 7075-T6	
11			0.040 CLAD 2024-T3	52-10-2 Fig. 1&2
12			0.040 CLAD 7075-T6	
13	0.063 CLAD 2024-T4	51-40-3 Fig. 1		

Forward Galley Door Structure Identification
Figure 1 (Sheet 1)

C04606

NOTES

- [A] FOR CUM LINE NUMBERS: 1 THRU 20
- [B] FOR CUM LINE NUMBERS: 21 AND ON
- [C] FOR CUM LINE NUMBERS: 1 THRU 541
- [D] FOR CUM LINE NUMBERS: 541 AND ON

REF DWG
65-45871

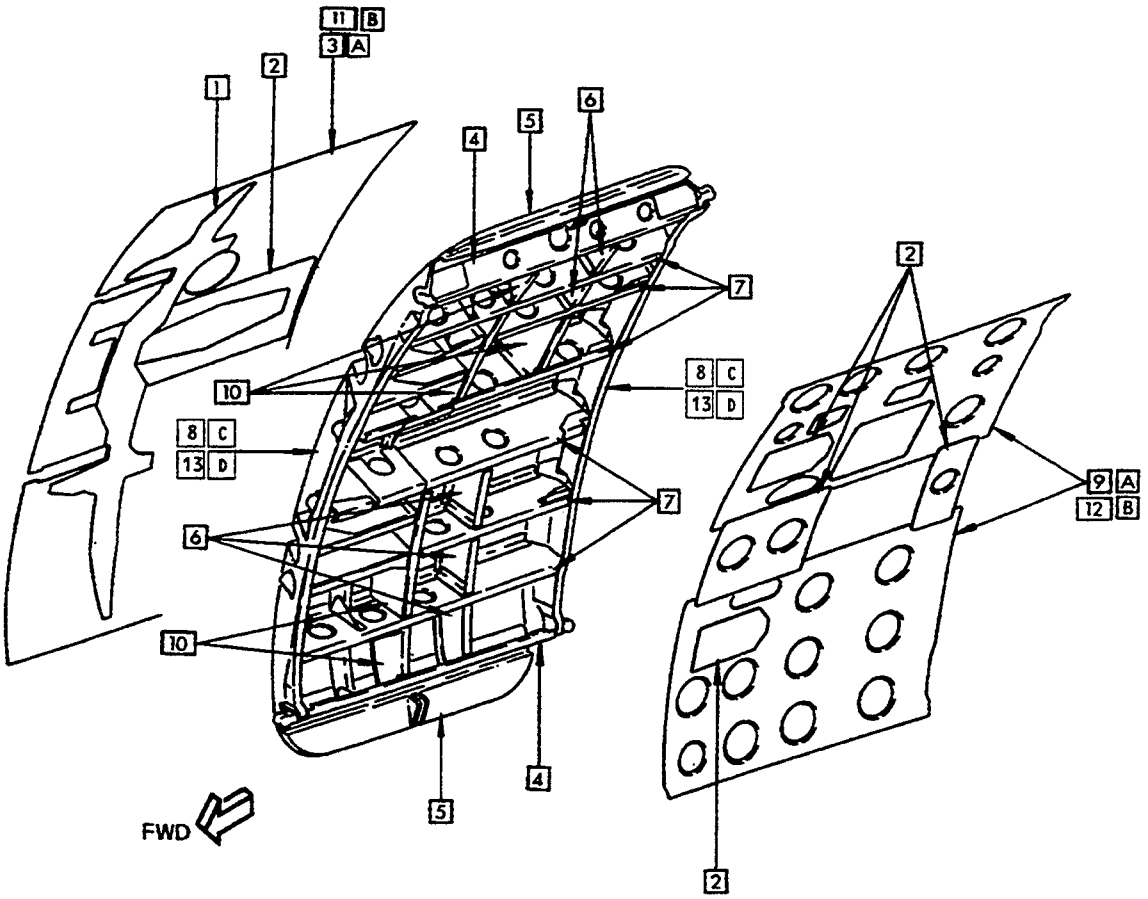

Forward Galley Door Structure Identification
Figure 1 (Sheet 2)

C04609

ITEM	CHORDS		WEB	
	MATERIAL	REPAIR FIG. NO.	MATERIAL	REPAIR FIG. NO.
1			0.056 CLAD 2024-T4	
2			0.050 CLAD 2024-T4	
3			0.045 CLAD 2024-T4	52-10-2 Fig. 1,2
4	0.063 CLAD 7075-T6	51-40-3 Fig. 1		
5	MAGNESIUM ALLOY CASTING AZ91C-T6			
6	0.056 CLAD 7075-T6		0.045 CLAD 7075-T6	
7	BAC1505-100543 2024-T42	51-40-4 Fig. 1	0.050 CLAD 7075-T6	51-40-3 Fig. 1
8			0.050 CLAD 7075-T6	
9	BAC1505-100543 2024-T42		0.056 CLAD 7075-T6	
10	0.056 CLAD 7075-T6		0.056 CLAD 7075-T6	
11	0.045 CLAD 7075-T6	51-40-3 Fig. 1		
12			0.040 CLAD 7075-T6	
13			0.032 CLAD 7075-T6	
14	STOP FITTING 7079-T6			
15	STOP FITTING 7075-T73			
16	0.071 CLAD 7075-T6	51-40-3 Fig. 1		

Aft Galley Door Structure Identification
Figure 2 (Sheet 1)

NOTES

REF DWG
65-45849

[A] FOR CUM LINE NUMBERS:
1 THRU 32

[B] FOR CUM LINE NUMBERS:
33 AND ON

[C] DELETED

[D] DELETED

[E] DELETED

[F] FORGINGS OF 7079-T6 HAVE BEEN REPLACED BY FORGINGS OF 7075-T73 IN PRODUCTION. 7075-T73 FORGINGS ARE RECOMMENDED WHEN EXISTING STOCKS OF 7079-T6 ARE EXHAUSTED

[G] FOR CUM LINE NUMBERS:
1 THRU 571

[H] FOR CUM LINE NUMBERS:
572 AND ON

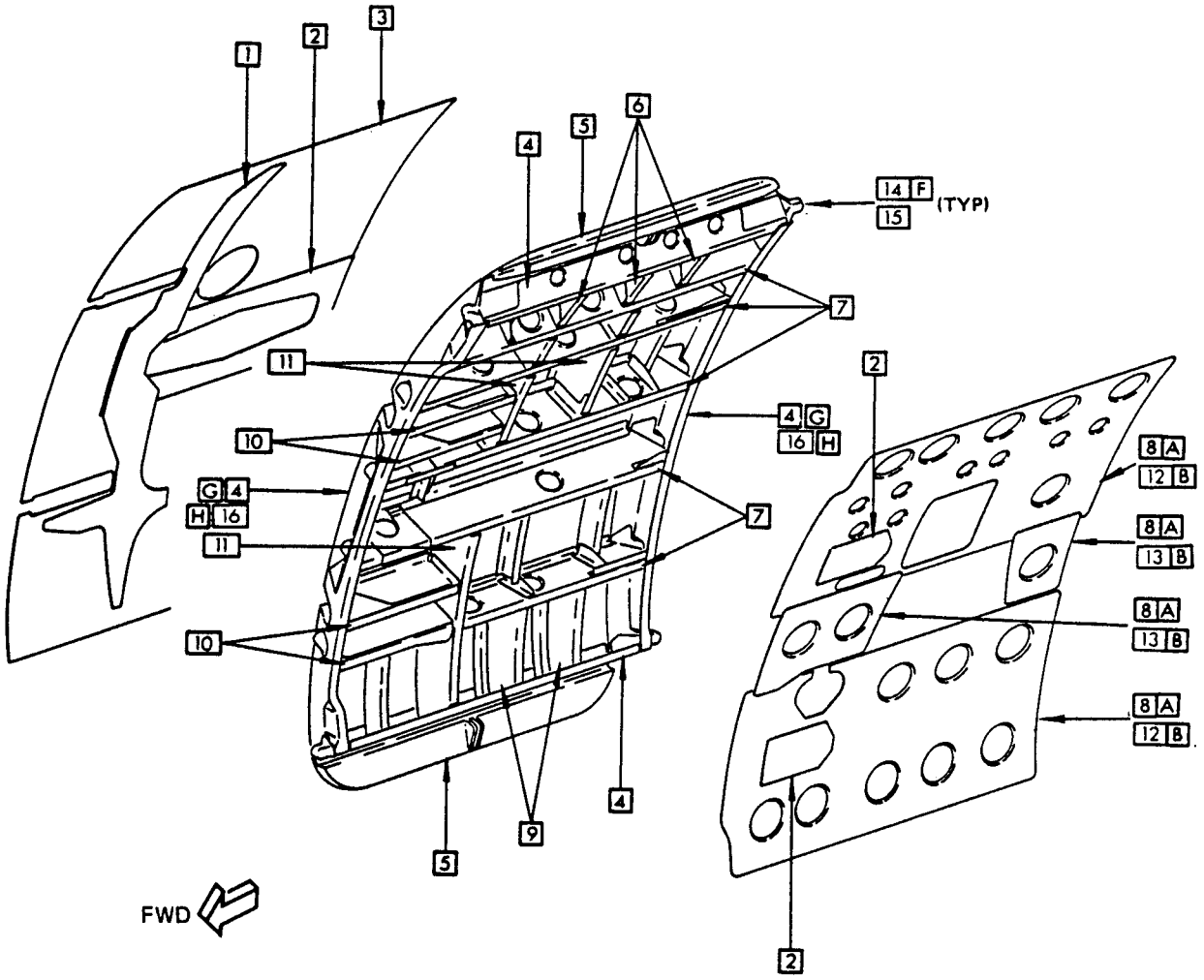

Aft Galley Door Structure Identification
Figure 2 (Sheet 2)

REF DWG
65-46583

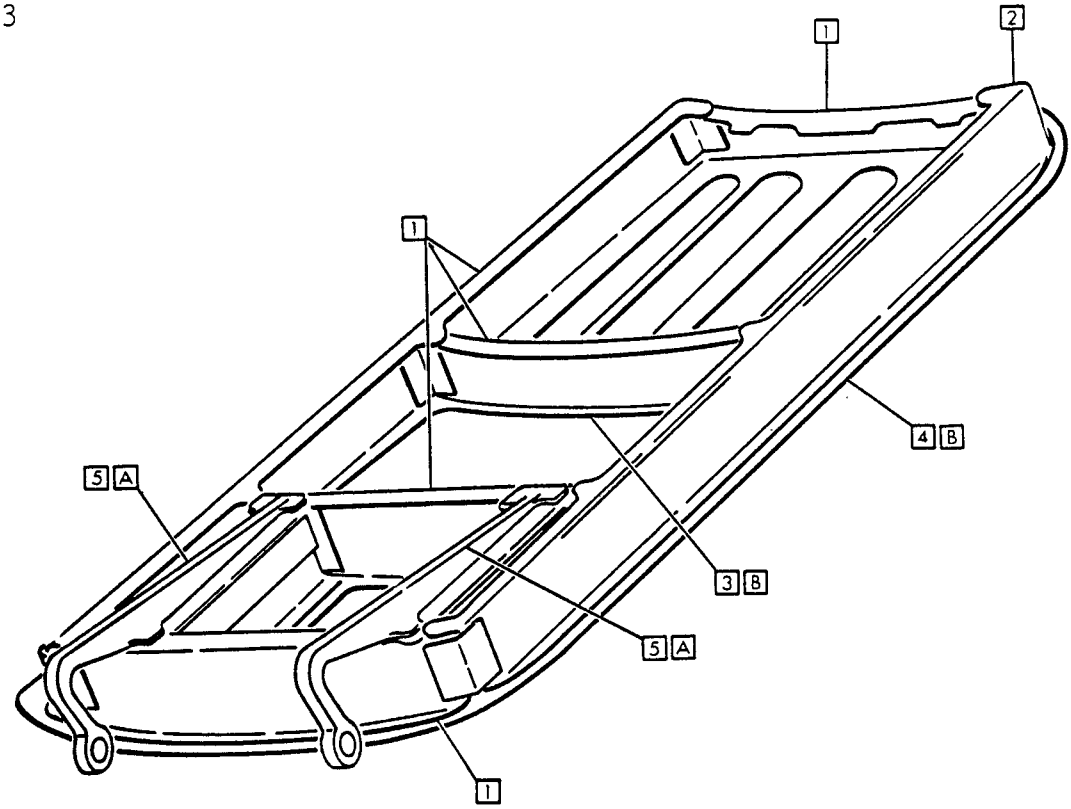

ITEM	MATERIAL	REPAIR FIG. NO.
1	.056 CLAD 7075-T6	51-40-3 Fig. 1
2	.063 CLAD 7075-T6	51-40-3 Fig. 1
3	.016 CLAD 2024-T3 B	
4	.032 CLAD 2024-T3 B	
5	BAC1520-1482 7075-T6411 A	

NOTE

A ATTACHMENT FITTING

B BONDED SKIN

Access and Blowout Door-Structure Identification
Figure 3

ITEM	INBOARD CHORD		WEB OR FORMED SECTION		OUTBOARD CHORD	
	MATERIAL	REPAIR FIG. NO.	MATERIAL	REPAIR FIG. NO.	MATERIAL	REPAIR FIG. NO.
1			.056 CLAD 2024-T3			
2			.040 CLAD 7075-T6	51-40-3 Fig. 1	BAC1506-148 2024-T4	51-40-4 Fig. 1
3			.045 CLAD 7075-T6	51-40-3 Fig. 1	BAC1505-100052 2024-T4	51-40-4 Fig. 1
4			.025 CLAD 2024-T3			
5			.032 CLAD 7075-T6			
6			.025 CLAD 2024-T3	B		
7			.040 CLAD 2024-T3	B		
8			MACHINED FROM 2024-T4 PLATE	A		
9			.10 CLAD 7075-T6			

NOTE

A ATTACHMENT FITTINGS

B BONDED SKINS

Forward Access Door - Structure Identification
Figure 4 (Sheet 1 of 2)

REF DWG
65-22216

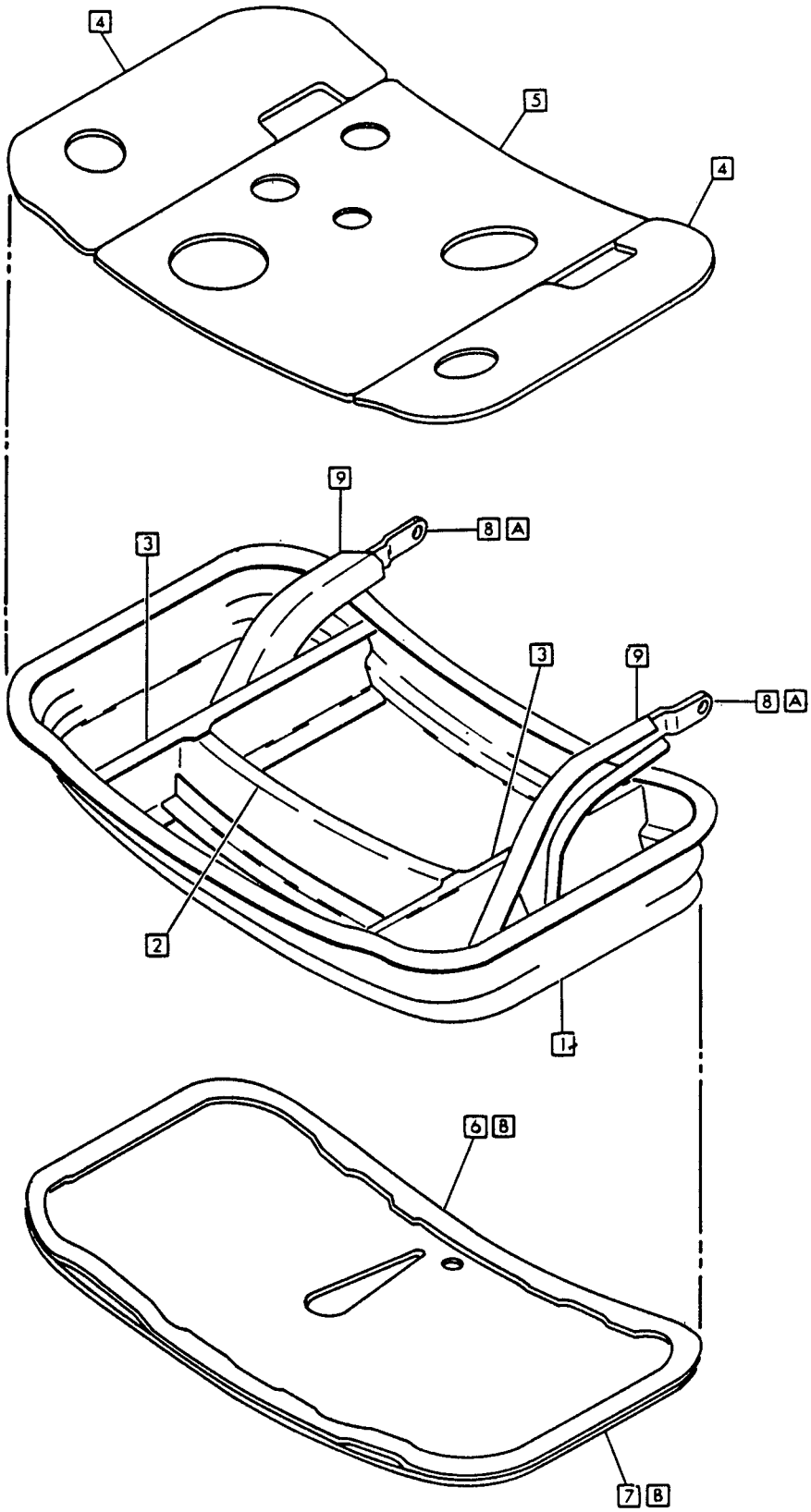

Forward Access Door - Structure Identification
Figure 4 (Sheet 2 of 2)

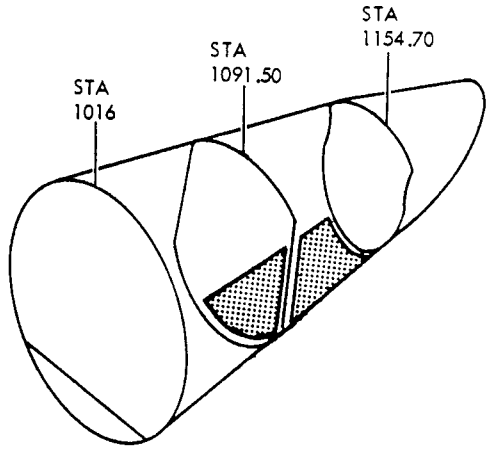

ITEM	MATERIAL	REPAIR FIG. NO.
1	.050 CLAD 2024-T42	51-40-3 Fig. 1
2	.020 CLAD 2024-T3	
3	.040 CLAD 2024-T42	51-40-3 Fig. 1
4	.063 CLAD 2024-T42	51-40-3 Fig. 1
5	.020 CRES SH ANNEALED 301 (321-347 OPTIONAL) COND 2D	
6	.032 + .020 CLAD 2024-T3	
7	.012 +.020 CLAD 2024-T3	
8	.032 +.020 CLAD 2024-T3	
9	.025 +.020 CLAD 2024-T3	
10	.032 CLAD 2024-T3	

Auxiliary Power Unit Cowl - Door Structure Identification
Figure 5 (Sheet 1 of 3)

NOTES

A FOR CUM LINE NUMBERS:
1 THRU 32

B FOR CUM LINE NUMBERS:
33 THRU 75, 77 THRU 79, 81 THRU
83, 99, 100

C DELETED

D FOR CUM LINE NUMBERS:
33 AND ON

E FOR CUM LINE NUMBERS:
76, 80, 84 THRU 98, 101 THRU 165

F FOR 737-100 AND 737-200 AIRPLANES
WITH CUM LINE NUMBERS:
166 AND ON (BOEING REF:
P0028-P0899, P0906-P2499,
P2717-P2799, P2822-P3499,
P3514-P3599, P4349-P4399,
P8503-P8799, P8826-P8899,
P8979-P9995

G DELETED

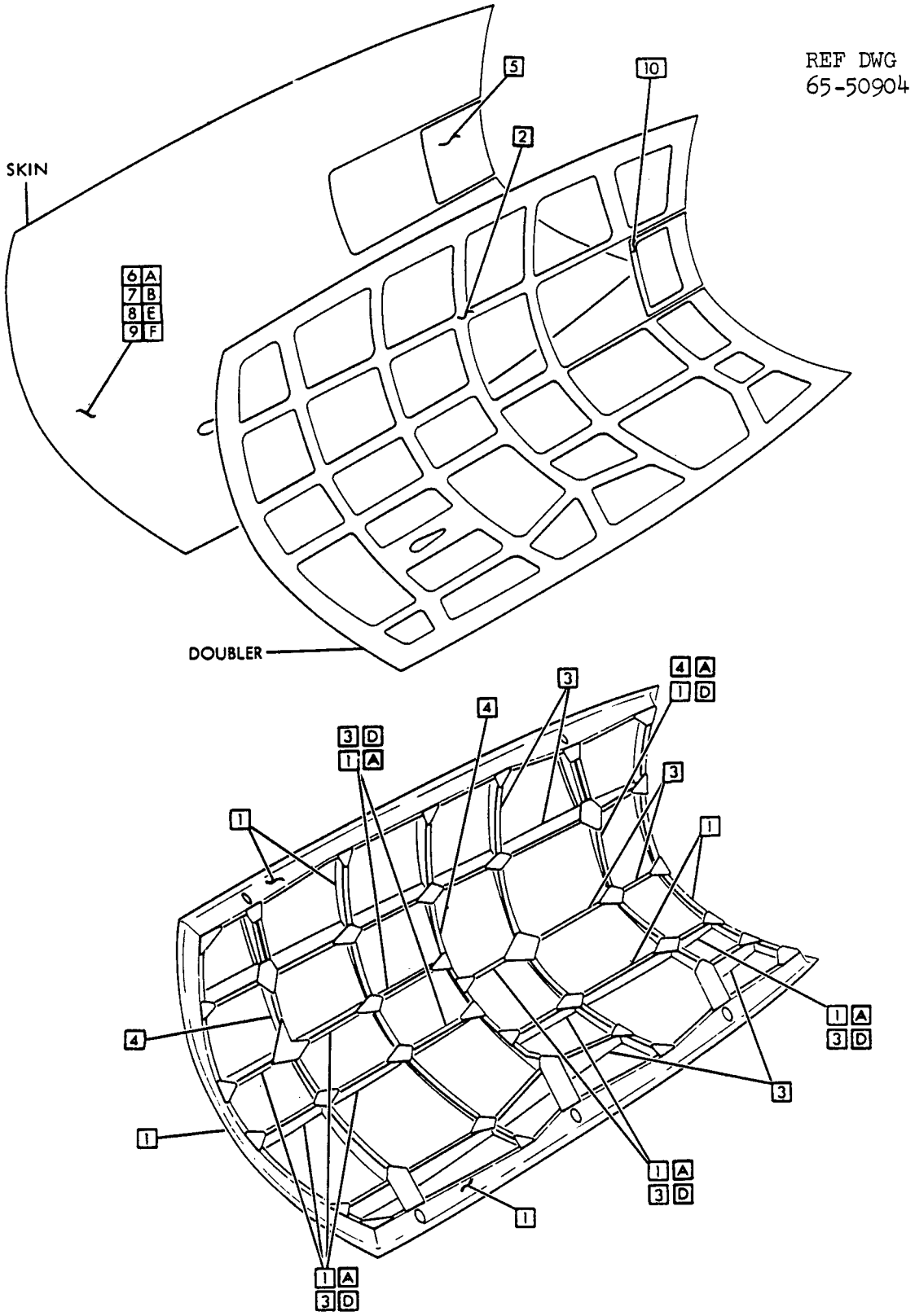

Auxiliary Power Unit Cowl - Door Structure Identification
Figure 5 (Sheet 3)

ITEM	MATERIAL	REPAIR FIG. NO.
1	0.040 CLAD 2024-T4	
2	0.040 CLAD 7075-T6	

ITEM	MATERIAL	REPAIR FIG. NO.
3	0.080 CLAD 2024-T4	
4	0.045 CLAD 7075-T6	

REF DWG
65-45830

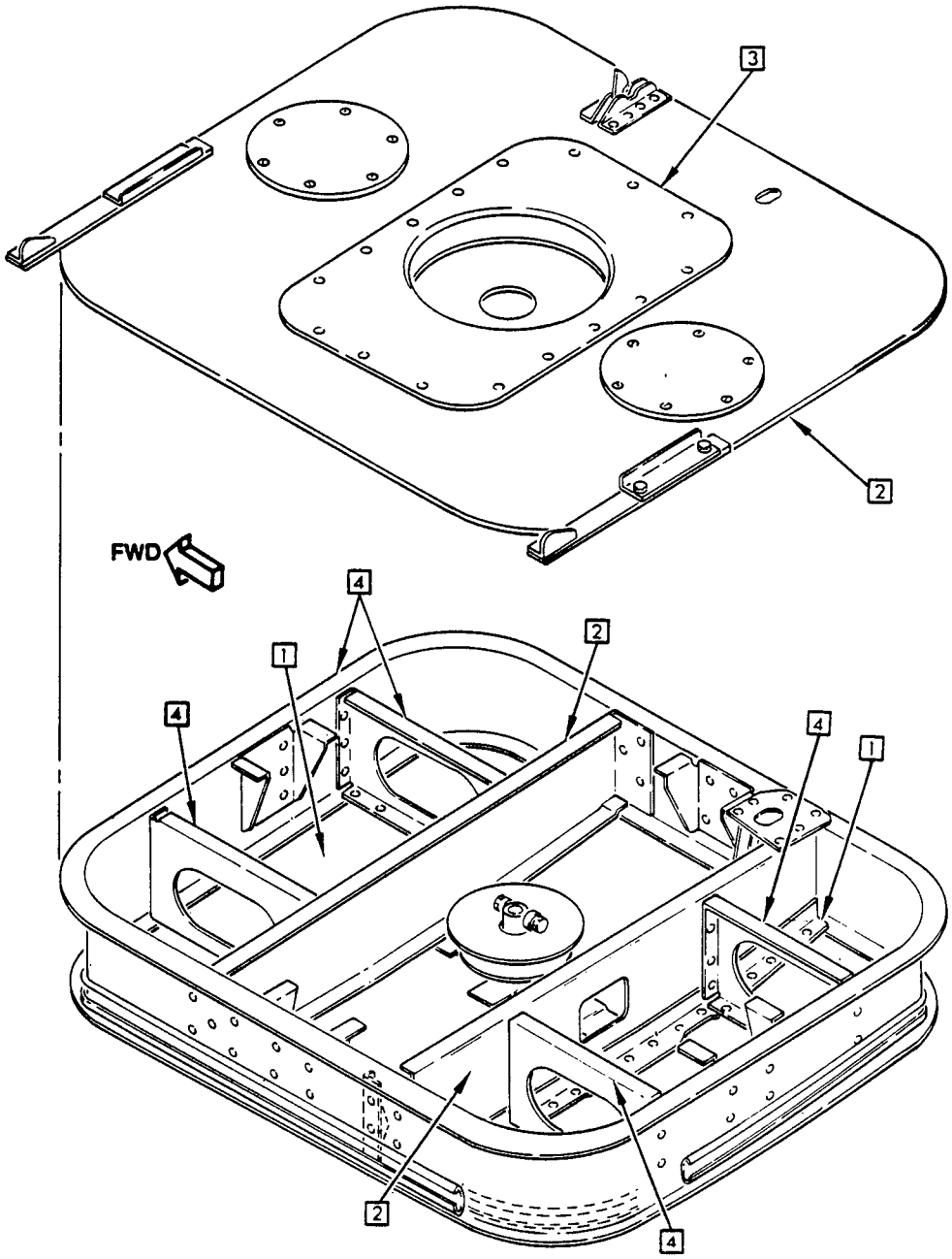

Equipment Access Door - Structure Identification
Figure 6

SERVICE BULLETIN REPAIRS

The following Service Bulletins contain repairs which are available for use where specific damage has been encountered. Usually, the Service Bulletin also covers preventive modification data which operators are encouraged to use to eliminate the need for repair.

DAMAGED AREA	CUM LINE NUMBER EFFECTIVITY [A]	SB NUMBER
DOORS - ELECTRONIC EQUIPMENT COMPARTMENT ACCESS DOOR INSPECTION, REPAIR AND MODIFICATION	1 THRU 461	737-52-1059
FORWARD ENTRY DOOR AND FORWARD GALLEY DOOR UPPER AND LOWER HINGE CUTOUTS	ALL 737-100/-200 AIRPLANES	737-52-1096
DOORS - FORWARD AIRSTAIR REMOVAL	ALL 737 AIRPLANES WITH FORWARD AIRSTAIR INSTALLED	737-53-1092
DOORS - FORWARD GALLEY -FORWARD FRAME -UPPER HINGE CUTOUT INSPECTION AND REINFORCEMENT	542 THRU 995	737-52-1104
FORWARD GALLEY DOOR FRAME INSPECTION, MODIFICATION AND REPAIR	1 THRU 541	737-52-1070

[A] FOR AIRPLANES ON WHICH PREVENTIVE MODIFICATION HAS NOT BEEN ACCOMPLISHED

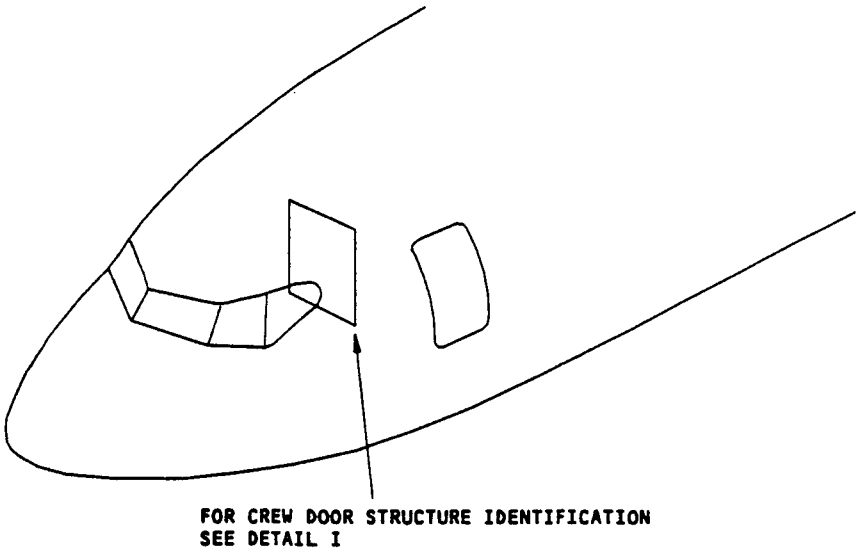

NOTES

[A] CORE RIBBON DIRECTION - TYPICAL
[B] WARP DIRECTION OPTIONAL
[C] 250°F (121°C) CURE AT MANUFACTURE

Crew Door Structure Identification
Figure 1 (Sheet 1)

276089

REF DWG
65-61342

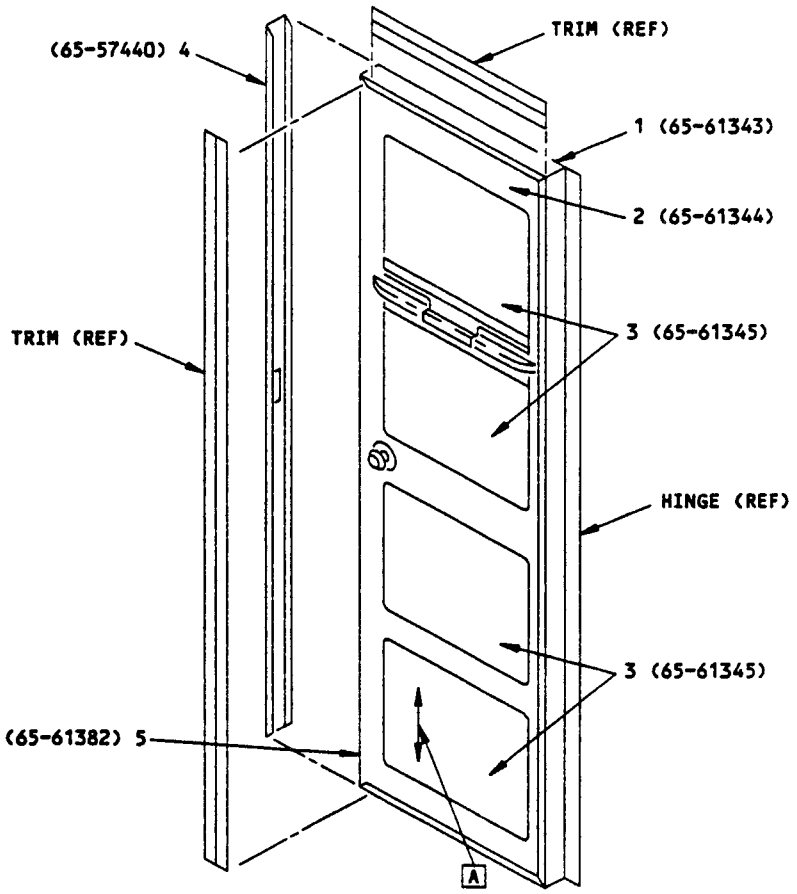

DETAIL I

Crew Door Structure Identification
Figure 1 (Sheet 2)

276088

ITEM	DESCRIPTION	GAGE	MATERIAL	EFFECTIVITY
1	DOOR PANEL	0.032	CLAD 2024-T4	
2	DOOR PANEL	0.032	CLAD 2024-T3	
3	DOOR PANEL ASSY SKIN - INNER, OUTER CORE		GLASS/EPOXY HONEYCOMB SANDWICH C PREPREG GLASS FABRIC PER BMS 8-79 CLASS I B NONMETALLIC HONEYCOMB PER BMS 8-124, CLASS I, TYPE I, GRADE 4.0	
4	CHANNEL ASSY CHANNEL CHANNEL DOUBLER DOUBLER	 0.050 0.032 0.040 0.032	 CLAD 2024-T4 CLAD 2024-T42 CLAD 2024-T3 CLAD 2024-T3	
5	CHANNEL ASSY CHANNEL CHANNEL DOUBLER ANGLE	 0.040 0.032 0.040 0.050	 CLAD 2024-T3 CLAD 2024-T42 CLAD 2024-T3 CLAD 2024-T42	

LIST OF MATERIALS FOR DETAIL I

Crew Door Structure Identification
Figure 1 (Sheet 3)

275884

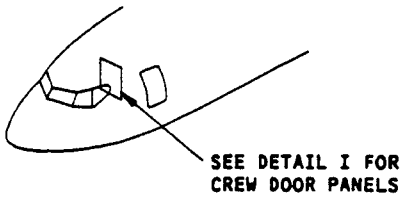

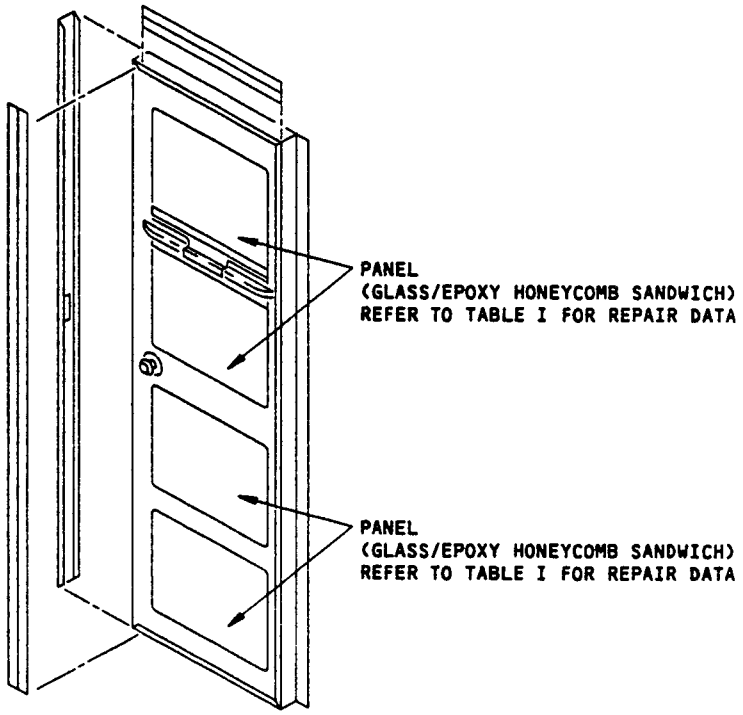

DETAIL I

Crew Door Fiberglass Honeycomb Panel Repairs
Figure 1 (Sheet 1)

275522

NOTES

- REFER TO 51-10-1 FOR INVESTIGATION AND CLEANUP OF DAMAGE
- WHERE NO REPAIR IS SPECIFIED, USE THE REPAIR INDEX IN THE APPROPRIATE REPAIR SECTION OF 51-40-9 TO DETERMINE THE REPAIR TO BE USED
- REFINISH REWORKED AREAS PER 51-21-0 OF THE 737 MAINTENANCE MANUAL
- MAINTAIN THE FOLLOWING FUNCTIONAL REQUIREMENTS: PANEL BLOWOUT DUE TO SUDDEN DEPRESSURIZATION, EMERGENCY EXIT FEATURE, AND ELECTRIC AND KEYED DOOR LOCK FUNCTION

[A] ONE REPAIR PER SQUARE FOOT OF AREA AND A MINIMUM OF 3.0 INCHES (EDGE TO EDGE) FROM ANY OTHER DAMAGE (ON EITHER SIDE OF PANEL), FASTENER HOLE, OR EDGE OF PANEL

DAMAGE	PERMANENT REPAIRS
	WET LAYUP ROOM TEMP (51-40-9)
HOLES	NO SIZE LIMIT
CRACKS	NO SIZE LIMIT
DELAMINATION	NO SIZE LIMIT
NICKS AND GOUGES	IF THERE IS NO FIBER DAMAGE OR DELAMINATION, FILL NICKS OR GOUGES PER 51-40-9. IF FIBER DAMAGE OR DELAMINATION EXISTS, USE SAME LIMITS AND REQUIREMENTS AS FOR HOLES.
DENTS	UP TO 2.0 IN. DIA WITH NO FIBER DAMAGE OR DELAMINATION, REPAIR PER 51-40-9, PAR. 19. [A] IF OVER 2.0 IN. DIA OR WITH FIBER DAMAGE OR DELAMINATION, USE SAME LIMITS AND REQUIREMENTS AS FOR HOLES.

REPAIR DATA FOR 250°F CURE GLASS/EPOXY HONEYCOMB PANELS
TABLE I

Crew Door Fiberglass Honeycomb Panel Repairs
Figure 1 (Sheet 2)

275523

EFFECTIVITY
FOR AIRPLANES WITH FWD AIRSTAIRS E

ITEM	CHORDS		WEB	
	MATERIAL	REPAIR FIG. NO.	MATERIAL	REPAIR FIG. NO.
1			0.045 CLAD 2024-T4	52-10-2 Fig. 1,2
2	0.063 CLAD 7075-T6	51-40-3 Fig. 1		
3			0.050 CLAD 7075-T6	
4	BAC1490-2715 CLAD 2024-T4	51-40-4	0.040 CLAD 7075-T6	51-40-3 Fig. 1
5	MACHINED FROM 7075-T6			
6			0.032 CLAD 2024-T4	
7			0.056 CLAD 7075-T6	
8	BAC1505-100120 2024-T3511	51-40-4	0.050 CLAD 7075-T6	51-40-3 Fig. 1
9	BAC1490-2776 CLAD 2024-T4	51-40-4	0.040 CLAD 7075-T6	51-40-3 Fig. 1
10	BAC1490-2690 CLAD 7075-T6		0.050 CLAD 7075-T6	
11	FORGING 7075-T73			

Forward Airstair Door Structure Identification
Figure 1 (Sheet 1)

EFFECTIVITY
FOR AIRPLANES WITH FWD AIRSTAIRS [E]

NOTE

[A] ATTACHMENT FITTING

[B] DELETED

[C] DELETED

[D] FORGINGS OF 7079-T6 HAVE BEEN REPLACED BY FORGINGS OF 7075-T73 IN PRODUCTION. 7075-T73 FORGINGS ARE RECOMMENDED WHEN STOCKS OF 7075-T6 ARE EXHAUSTED

AIRSTAIR AND AIRSTAIR DOOR ARE NOT INCLUDED IN AIRPLANES LINE NUMBERS 726, 727, 734, 735, 745, 754, 759, 762, 766, 768, 770, 776, 780, 781, 785, 788, 791, 792, 794, 796, 798

REF DWG 65-45887

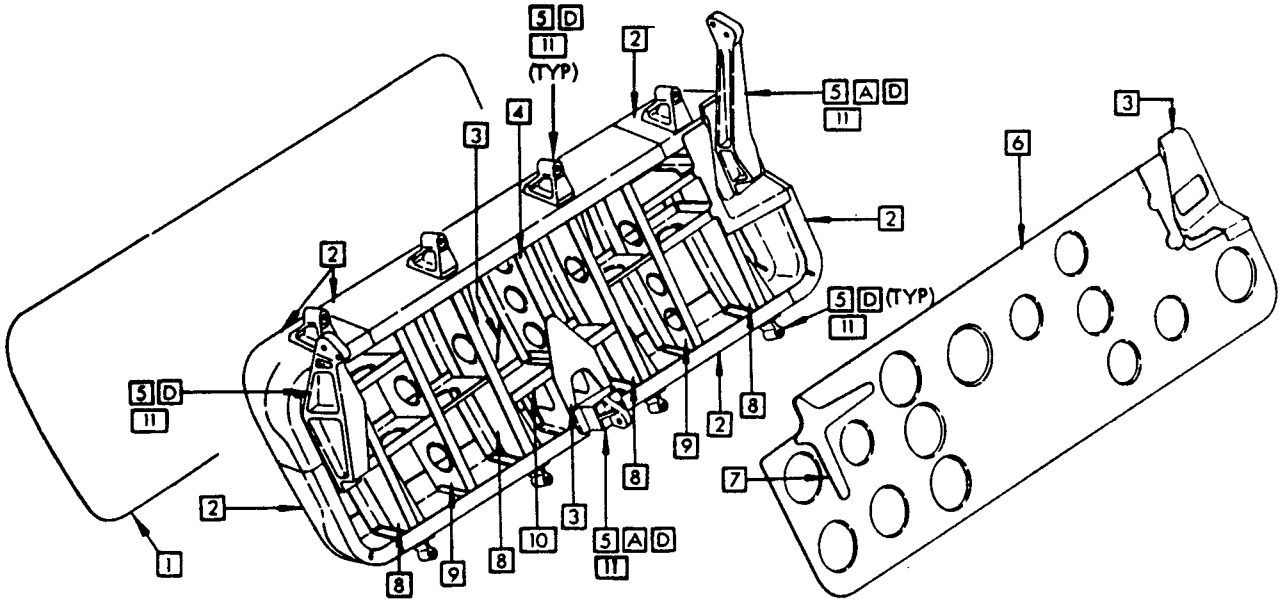

Forward Airstair Door Structure Identification
Figure 1 (Sheet 2)

THE FORWARD AIRSTAIR IS MANUFACTURED BY WEBER AIRCRAFT TO DRAWING 808000 AIRSTAIR ASSEMBLY -605.

REFER TO WEBER AIRCRAFT OVERHAUL MANUAL, SECTION 52-60-3 FOR PARTS LIST, IDENTIFICATION OF MATERIALS AND MAINTENANCE INSTRUCTIONS.

WEBER AIRCRAFT COMPANY, 2820 ONTARIO STREET, BURBANK, CALIFORNIA 91505

Forward Airstair Structure Identification
Figure 2

REF DWG
65-50520

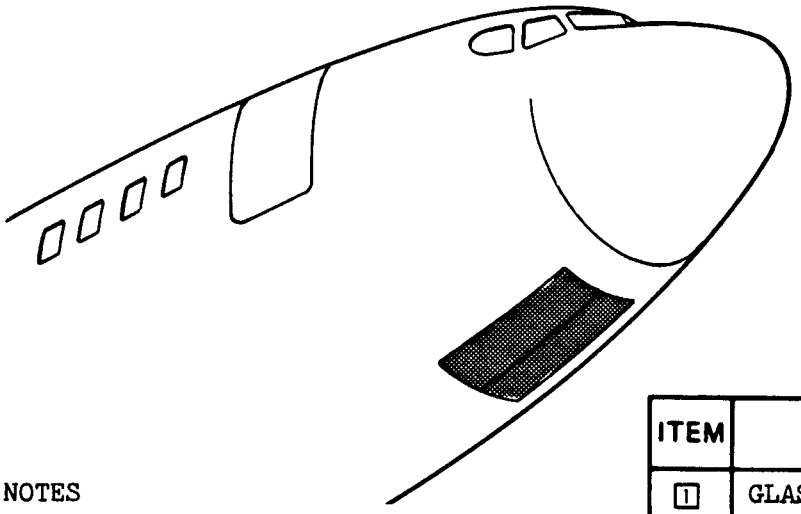

ITEM	MATERIAL	REPAIR FIG. NO.
1	GLASS FABRIC REINFORCED EPOXY LAMINATE	51-40-9 Fig. 1
2	HONEYCOMB HRP 3/16 GF11-40	51-40-9 Fig. 1
3	ATTACH FITTING FORGING 7079-T611 OR 7075-T73	

NOTES

- THIS FIGURE APPLIES TO ALL 737-200C AIRPLANES AND TO 737-100 AND 737-200 AIRPLANES WITH GLASS FABRIC NLG DOORS, CUM LINE NUMBERS 1 THRU 1000, 1002 THRU 1006, 1008-1014, 1016 THRU 1021, 1023 THRU 1026, 1031 (BOEING REF: P4420 THRU P4799, P8503 THRU P8799, P8826 THRU P8899 (EXCLUSIVE OF AIRPLANES WITH GRAVEL RUNWAY KIT OPTION)

  FORGINGS OF 7079-T611 HAVE BEEN REPLACED BY FORGINGS OF 7075-T73 IN PRODUCTION. 7075-T73 FORGINGS ARE RECOMMENDED FOR REPLACEMENT WHEN STOCKS OF 7079-T6 ARE EXHAUSTED.

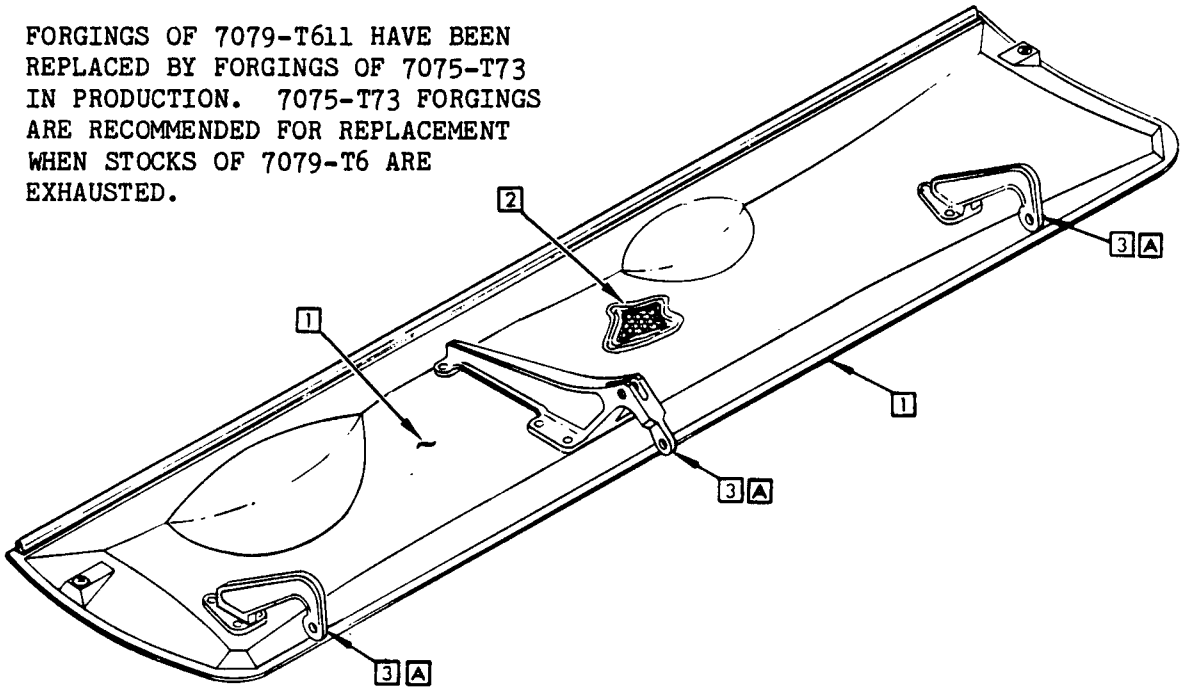

Nose Landing Gear Door Structure Identification
(Glass Fabric NLG Doors)
Figure 1

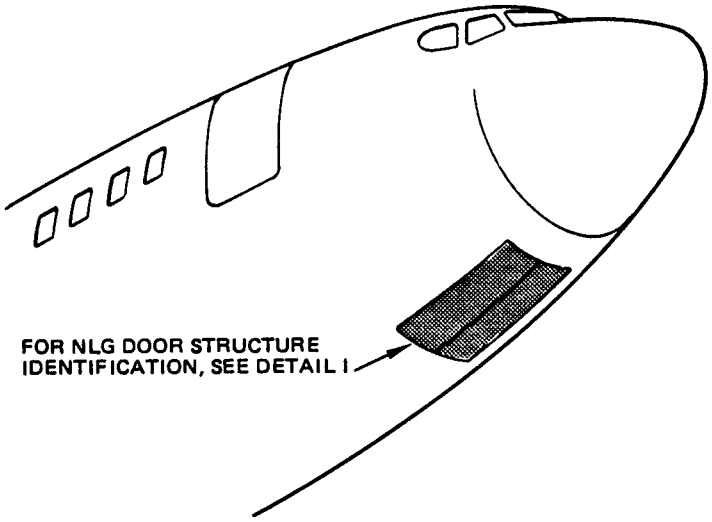

NOTES

- THIS FIGURE APPLIES TO 737-200 AIRPLANES WITH GRAPHITE COMPOSITE NLG DOORS, CUM LINE NUMBERS 1027, 1029, 1030, 1031, 1032, 1034, 1035, 1036, 1039 THRU 1042, 1044 THRU 1047, 1049, 1050, 1051, 1053, 1054 THRU 1056, 1058 THRU 1062, 1064 THRU 1068, 1070 THRU 1072, 1074, 1075, 1077 THRU 1079, 1081, 1082, 1084 THRU 1086, 1088, 1089, 1091, 1093, 1095, 1097, 1099, 1102, 1105, 1109, 1113, 1117, 1120, 1135, 1143, 1151, 1154, 1155, 1165, 1167, 1176, 1178, 1186, 1189, 1194, 1197, 1199, 1203, 1223, 1226, 1236, 1241, 1245, 1256, 1257, 1261, 1262, 1265, 1266, 1267, 1299, 1313, 1319, 1329, 1342, 1347, 1361, 1369, 1371, 1379, 1387, 1392, 1397, 1399, 1401, 1403, 1405, 1414, 1415, 1418, 1420, 1422, 1424, 1426, 1453, 1456, 1486 (BOEING REF: (P4341-4399, P4801-P5499, P8979-P9995) (EXCLUSIVE OF AIRPLANES WITH GRAVEL RUNWAY KIT OPTION)

[A] PLY ORIENTATION CONVENTION: THE PLY ORIENTATION OF EACH PLY IS DESIGNATED BY A NUMBER (IN DEGREES) REPRESENTING THE ORIENTATION OF THE AXIS PARALLEL TO THE DIRECTION OF FILAMENTS (IN TAPE) OR LONGITUDINALLY ORIENTED YARN (IN A WOVEN FABRIC) WITH RESPECT TO A REFERENCE AXIS. 0 DEGREES IS THE REFERENCE AXIS. THE DIRECTION OF LONGITUDINAL YARN IN A WOVEN FABRIC IS CALLED THE WARP DIRECTION

[B] MATERIAL AND PLY ORIENTATION IS ALWAYS SHOWN FOR FIELD AREAS. SEE BOEING DRAWINGS FOR EDGE BANDS AND AREAS WITH DOUBLERS WHENEVER THEY ARE NOT SHOWN IN THE MANUAL AS ADJUNCTS TO FIELD AREAS.

[C] PREPREG GLASS FABRIC PER BMS 8-139, TYPE 120

[D] PREPREG GRAPHITE FABRIC PER BMS 8-258, GLASS II, STYLE 3K-70-PW

[E] CORE RIBBON DIRECTION - OPTIONAL

Nose Landing Gear Door Structure Identification
(Graphite Composite NLG Doors)
Figure 1A (Sheet 1)

REF DWG
65-50520
65C28111

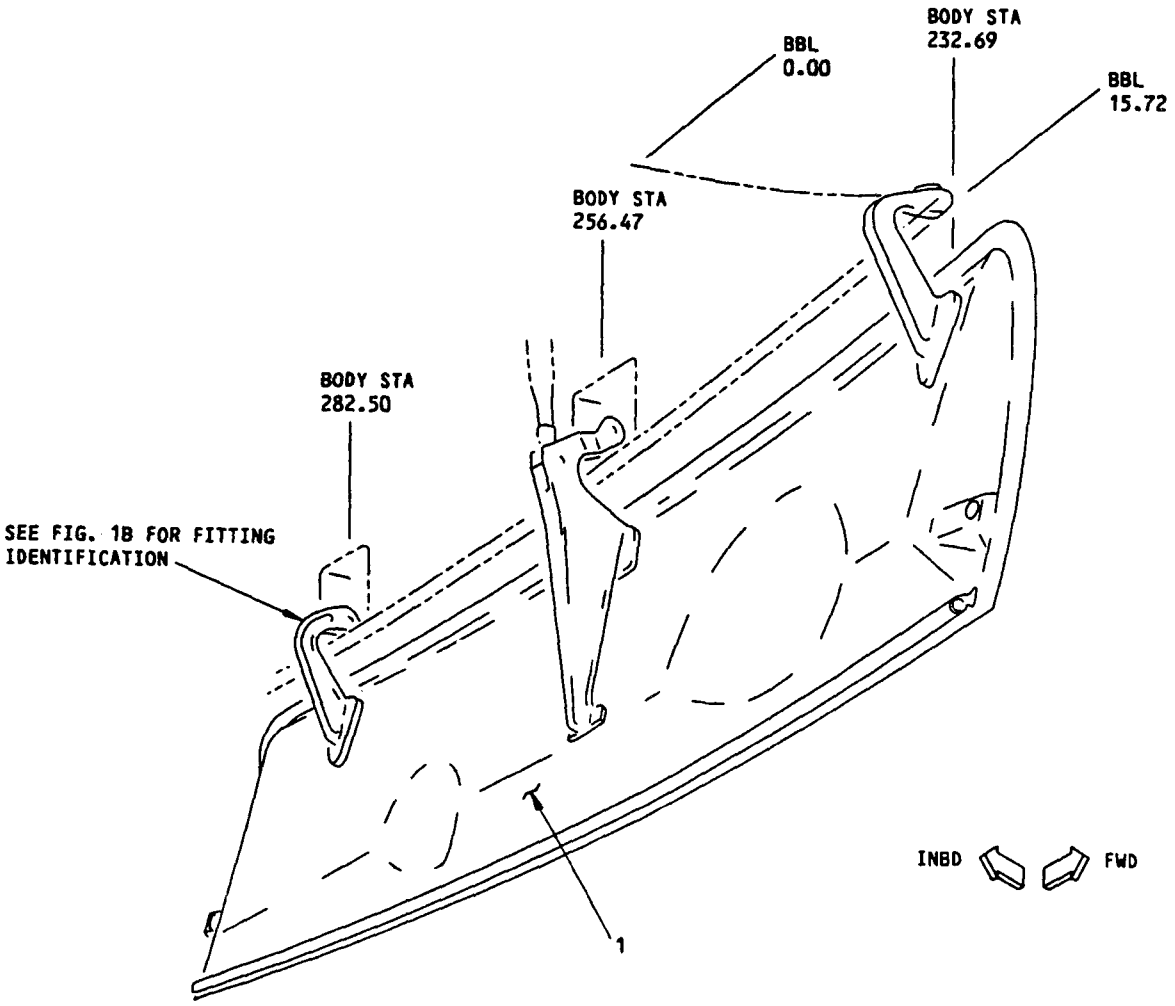

DETAIL I

Nose Landing Gear Door Structure Identification
(Graphite Composite NLG Doors)
Figure 1A (Sheet 2)

ITEM	DESCRIPTION	GAGE	MATERIAL	EFFECTIVITY
1	NOSE LANDING GEAR DOOR—BOND ASSY		GLASS/GRAPHITE/EPOXY HONEYCOMB SANDWICH	
	SKIN		SEE DETAIL II	
	CORE		NON—METALLIC HONEYCOMB PER BMS 8—124, CLASS I, TYPE I, GRADE 4.0	

LIST OF MATERIALS FOR DETAIL I

Nose Landing Gear Door Structure Identification
(Graphite Composite NLG Doors)
Figure 1A (Sheet 3)

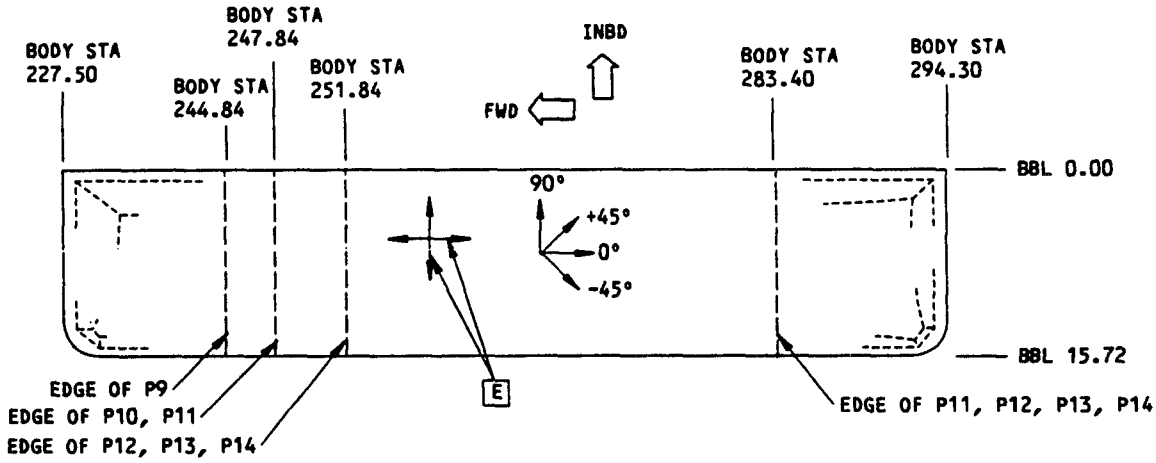

VIEW ON NOSE LANDING GEAR DOOR [A]

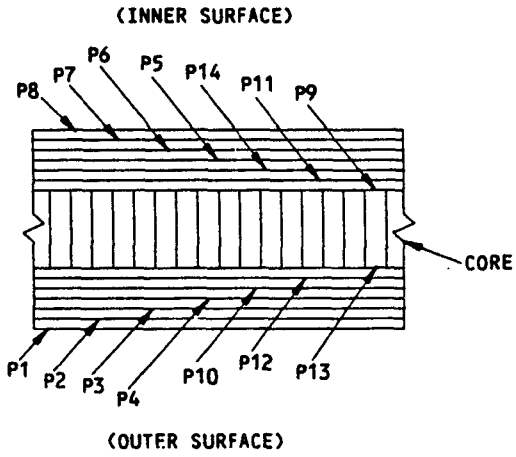

SECTION THRU HONEYCOMB DOOR

ITEM	PLY NO.	MATERIAL	PLY ORIENTATION
1	P1,P8	[C]	0° OR 90°
	P2,P4,P5,P7, P11,P12,P13, P14	[D]	± 45°
	P3,P6,P9,P10	[D]	0° OR 90°

PLY TABLE FOR NOSE LANDING GEAR DOOR [B]

DETAIL II

Nose Landing Gear Door Structure Identification
(Graphite Composite NLG Doors)
Figure 1A (Sheet 4)

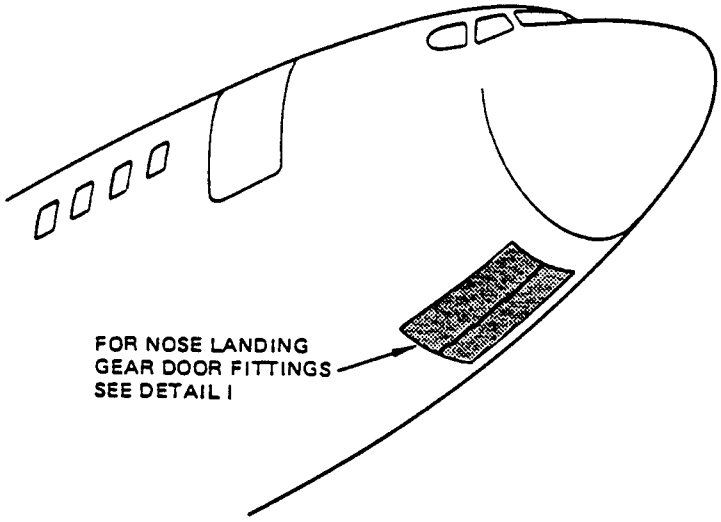

NOTE

- THIS FIGURE APPLIES TO 737-200 AIRPLANES WITH GRAPHITE COMPOSITE NLG DOORS, CUM LINE NUMBERS 1027, 1029, 1030, 1031, 1032, 1034, 1035, 1036, 1039 THRU 1042, 1044 THRU 1047, 1049, 1050, 1051, 1053, 1054 THRU 1056, 1058 THRU 1062, 1064 THRU 1068, 1070 THRU 1072, 1074, 1075, 1077 THRU 1079, 1081, 1082, 1084 THRU 1086, 1088, 1089, 1091, 1093, 1095, 1097, 1099, 1102, 1105, 1109, 1113, 1117, 1120, 1135, 1143, 1151, 1154, 1155, 1165, 1167, 1176, 1178, 1186, 1189, 1194, 1197, 1199, 1203, 1223, 1226, 1236, 1241, 1245, 1256, 1257, 1261, 1262, 1265, 1266, 1267, 1299, 1313, 1319, 1329, 1342, 1347, 1361, 1369, 1371, 1379, 1387, 1392, 1397, 1399, 1401, 1403, 1405, 1414, 1415, 1418, 1420, 1422, 1424, 1426, 1453, 1456, 1486 (BOEING REF: (P4341-4399, P4801-P5499, P8979-P9995) (EXCLUSIVE OF AIRPLANES WITH GRAVEL RUNWAY KIT OPTION)

Nose Landing Gear Door Fitting Identification
(Graphite Composite NLG Doors)
Figure 1B (Sheet 1)

REF DWG
65C28111

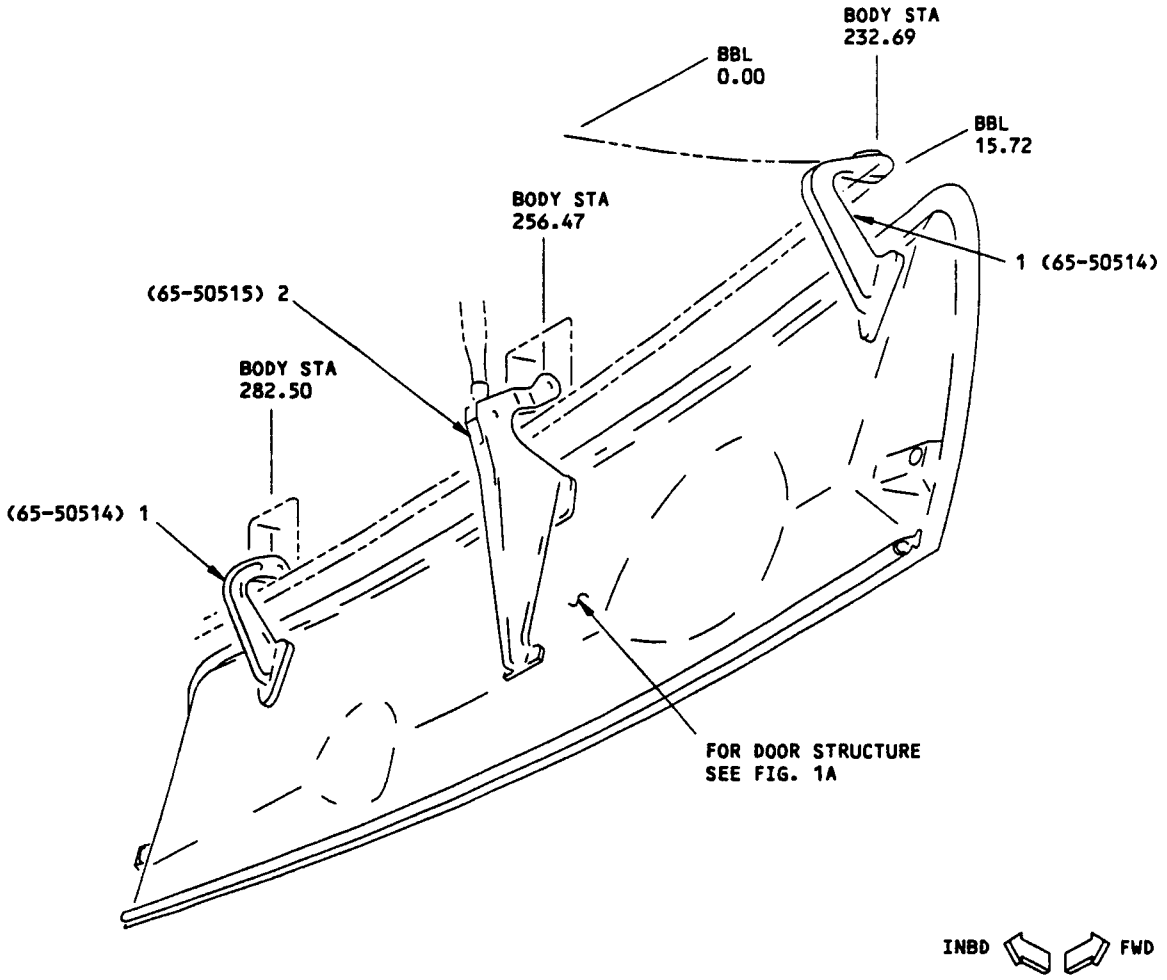

DETAIL I

ITEM	DESCRIPTION	GAGE	MATERIAL	EFFECTIVITY
1	HINGE FITTING - FWD, AFT		FORGING 7075-T73	
2	HINGE FITTING - CTR		FORGING 7075-T73	

LIST OF MATERIALS FOR DETAIL I

Nose Landing Gear Door Fitting Identification
(Graphite Composite NLG Doors)
Figure 1B (Sheet 2)

114179

ITEM	MATERIAL	REPAIR FIG. NO.
1	CASTING 356-T71	
2	ALUMINUM PLATE 2024-T4	
3	0.063 CLAD 2024-T4	
4	0.032 CLAD 2024-T4	
5	0.032 + .032 CLAD SHT 2024-T3	
6	0.032 CLAD 2024-T42	
7	0.02 CLAD 2024-T3	
8	0.02 CLAD 2024-T42	
9	0.016 CLAD 2024-T42	
10	0.50 HONEYCOMB 4-20N	
11	1.00 HONEYCOMB 3-25N	51-40-6
12	0.032 CLAD 2024-T3	
13	0.0625 COTTON FABRIC	
14	BAC1521-689	
15	ALUM HONEYCOMB 0.75 x 3-20N	51-40-6
16	0.040 CLAD 2024-T3	
17	0.040 CLAD 2024-T4	
18	0.02 CLAD 2024-T4	
19	0.05 CLAD 2024-T4	
20	FORGING 2014-T6	
21	0.063 CLAD 2024-T3	
22	2.25 ALUMINUM PLATE 2024-T3511	
23	BAC1503-100547 2024-T3511	
24	PANEL ASSY INSIDE SKIN 0.016 CLAD 2024-0, HT-T42 DOUBLER 0.020 CLAD 2024-0, HT-T4 OUTSIDE SKIN 0.020 CLAD 2024-0, HT-T42 WITH 0.50 THICK ALUMINUM HONEYCOMB CORE 4-20N PER BMS 4-4F	
25	ALUMINUM HONEYCOMB CORE 0.75 THICK, 4-20N PER BMS 4-4F	51-40-6
26	ALUMINUM HONEYCOMB PANEL UPPER SHEET 0.020 CLAD 2024-T3 CORE 0.49 + 0.20, 3-20N PER BMS 4-4F INNER SKIN 0.040 CLAD 2024-T3 LOWER SHEET 0.020 CLAD 2024-T3	51-40-6

Main Landing Gear Door Structure Identification
(Metal MLG Doors)
Figure 2 (Sheet 1)

ITEM	MATERIAL	REPAIR FIG. NO.
27	GLASS FABRIC REINFORCED EPOXY, BMS 8-79, CLASS I, TYPE 181	
28	0.50 FIBERGLASS HONEYCOMB, BMS 8-124 CLASS I, TYPE I, GRADE 4	

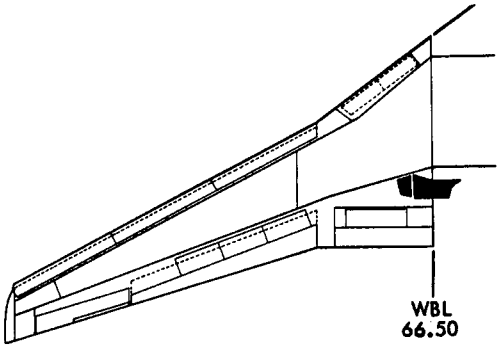

NOTES

- THIS FIGURE APPLIES TO ALL 737-200 C AIRPLANES AND TO 737-100 AND 737-200 AIRPLANES WITH METAL MLG DOORS, CUM LINE NUMBERS 1 THRU 1000, 1002 THRU 1006, 1008 THRU 1014, 1016 THRU 1021, 1023 THRU 1026, (BOEING REF: P4420 THRU P4799, P8501 THRU P8970)

A ATTACHMENT FITTING

B BONDED ASSEMBLY

C FOR CUM LINE NUMBERS: 1 AND 2

D FOR CUM LINE NUMBERS: 3 AND ON

E FOR CUM LINE NUMBERS: 1 THRU 32

F FOR CUM LINE NUMBERS: 33 AND ON

G FOR CUM LINE NUMBERS: 1 THRU 22

H FOR CUM LINE NUMBERS: 23 AND ON

J FOR CUM LINE NUMBERS: 272 AND ON AND EARLIER AIRPLANES WITH SB 32-1056 INCORPORATED

K DELETED

L FOR CUM LINE NUMBERS: 1 THRU 314

M FOR CUM LINE NUMBERS: 315 AND ON

N DELETED

O FOR CUM LINE NUMBERS: 1 THRU 363

P FOR CUM LINE NUMBERS: 364 AND ON

Main Landing Gear Door Structure Identification
(Metal MLG Doors)
Figure 2 (Sheet 2)

REF DWG
65-73718

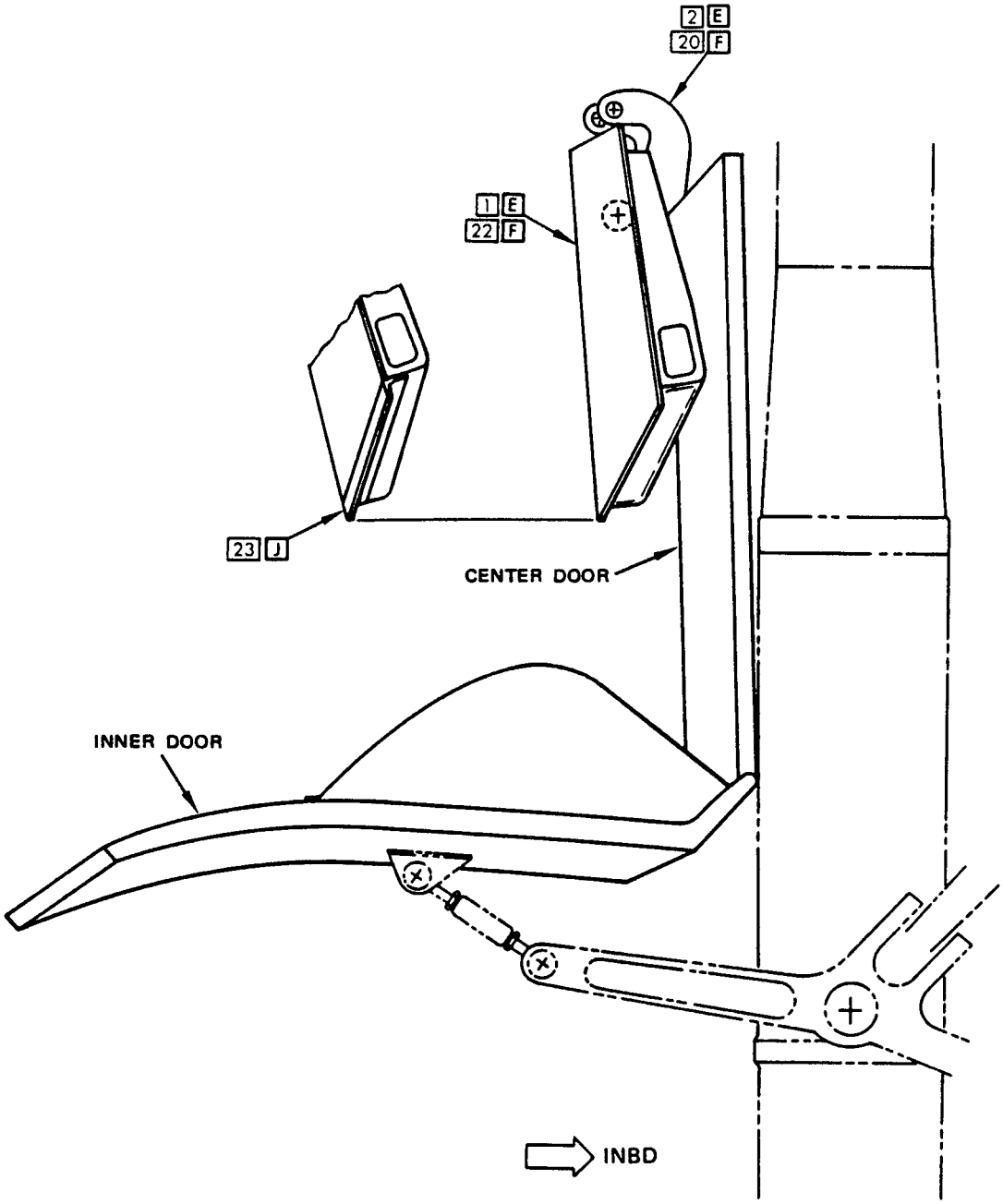

Main Landing Gear Door Structure Identification
(Metal MLG Doors)
Figure 2 (Sheet 3)

REF DWG
65-52202

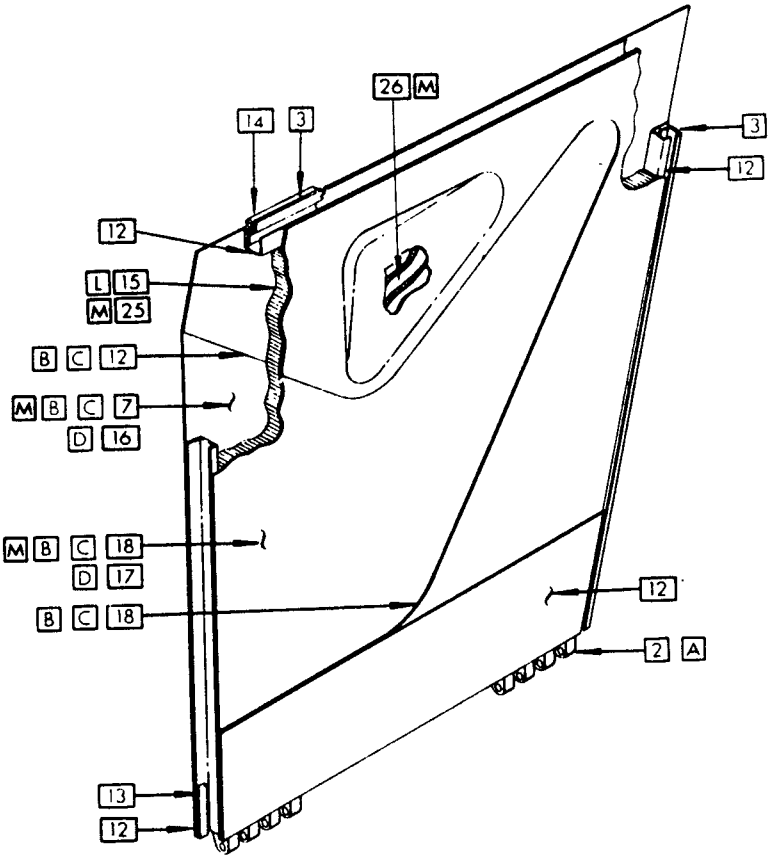

CENTER DOOR

Main Landing Gear Door Structure Identification
(Metal MLG Doors)
Figure 2 (Sheet 4)

REF DWG
65-52201

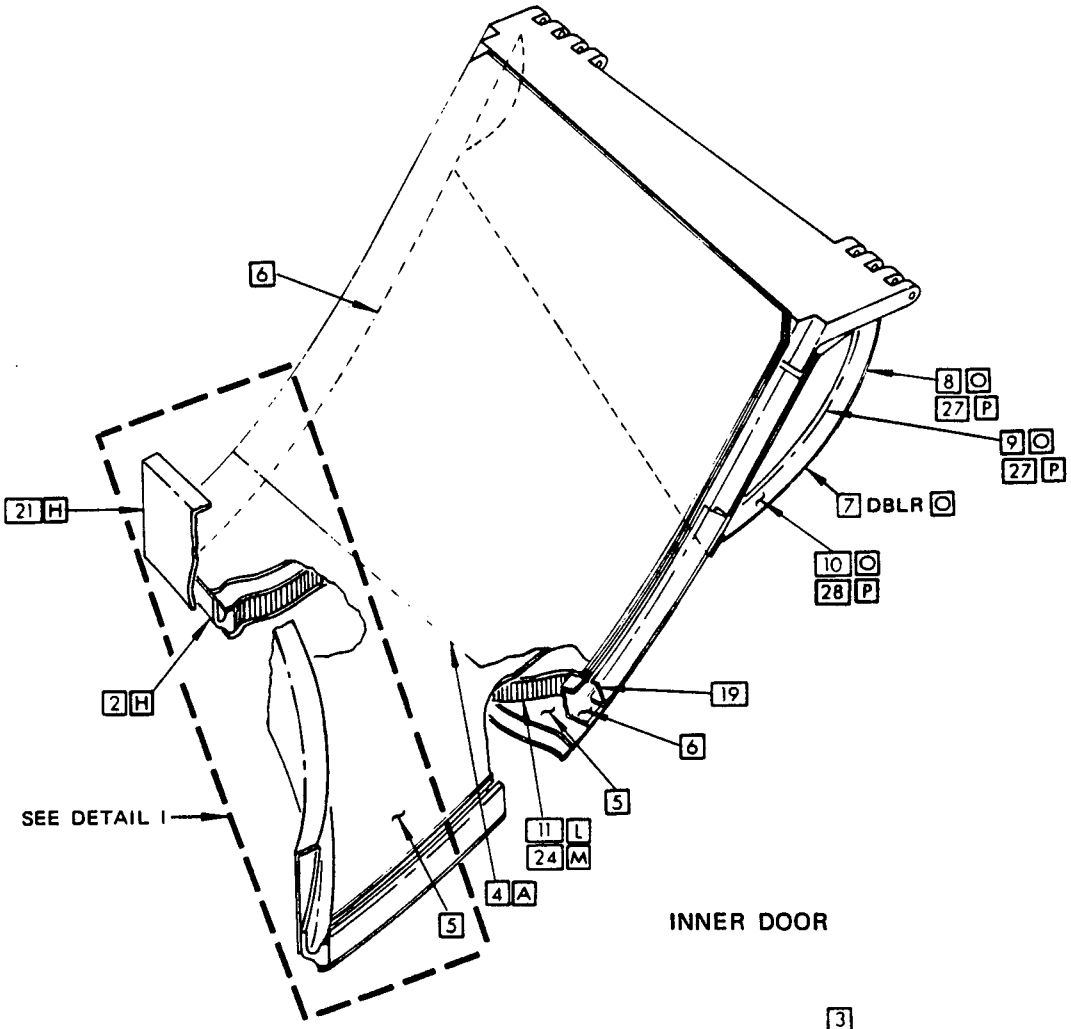

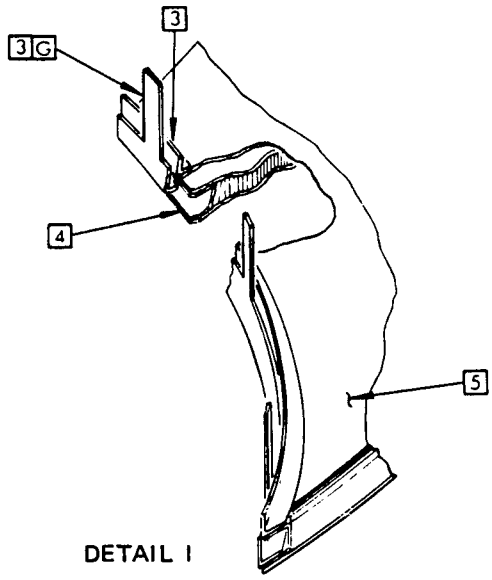

Main Landing Gear Door Structure Identification
(Metal MLG Doors)
Figure 2 (Sheet 5)

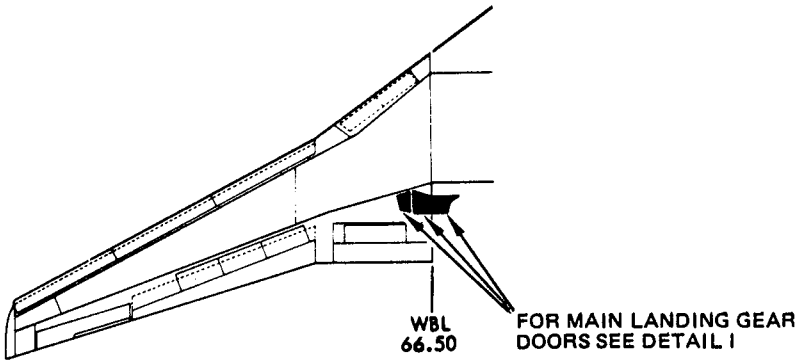

NOTES

- THIS FIGURE APPLIES TO 737-200 AIRPLANES WITH GRAPHITE COMPOSITE MLG DOORS, CUM LINE NUMBERS 1027, 1029, 1030, 1031, 1032, 1034, 1035, 1036, 1039 THRU 1042, 1044 THRU 1047, 1049, 1050, 1051, 1053, 1054 THRU 1056, 1058 THRU 1062, 1064 THRU 1068, 1070 THRU 1072, 1074, 1075, 1077 THRU 1079, 1081, 1082, 1084 THRU 1086, 1088, 1089, 1091, 1093, 1095, 1097, 1099, 1102, 1105, 1109, 1113, 1117, 1120, 1135, 1143, 1151, 1154, 1155, 1165, 1167, 1176, 1178, 1186, 1189, 1194, 1197, 1199, 1203, 1223, 1226, 1236, 1241, 1245, 1256, 1257, 1261, 1262, 1265, 1266, 1267, 1299, 1313, 1319, 1329, 1342, 1347, 1361, 1369, 1371, 1379, 1387, 1392, 1397, 1399, 1401, 1403, 1405, 1414, 1415, 1418, 1420, 1422, 1424, 1426, 1453, 1456, 1486 (BOEING REF: P4341-P4399, P4801-P5499, P8979-P9995)

[A] PLY ORIENTATION CONVENTION: THE PLY ORIENTATION OF EACH PLY IS DESIGNATED BY A NUMBER (IN DEGREES) REPRESENTING THE ORIENTATION OF THE AXIS PARALLEL TO THE DIRECTION OF FILAMENTS (IN TAPE) OR LONGITUDINALLY ORIENTED YARN (IN A WOVEN FABRIC) WITH RESPECT TO A REFERENCE AXIS. 0 DEGREES IS THE REFERENCE AXIS. THE DIRECTION OF LONGITUDINAL YARN IN A WOVEN FABRIC IS CALLED THE WARP DIRECTION

[B] MATERIAL AND PLY ORIENTATION IS ALWAYS SHOWN FOR FIELD AREAS. SEE BOEING DRAWINGS FOR EDGE BANDS AND AREAS WITH DOUBLERS WHENEVER THEY ARE NOT SHOWN IN THE MANUAL AS ADJUNCTS TO FIELD AREAS.

[C] PREPREG GLASS FABRIC PER BMS 8-79, TYPE 1581

[D] PREPREG GRAPHITE FABRIC PER BMS 8-168, GRADE 190, TYPE II

[E] PREPREG GRAPHITE FABRIC PER BMS 8-168, STYLE 3K-70-W, TYPE II, CLASS II

[F] PREPREG GLASS FABRIC PER BMS 8-79, TYPE 120

[G] CORE RIBBON DIRECTION

Main Landing Gear Door Structure Identification
(Graphite Composite MLG Doors)
Figure 2A (Sheet 1)

REF DWG
65C27197

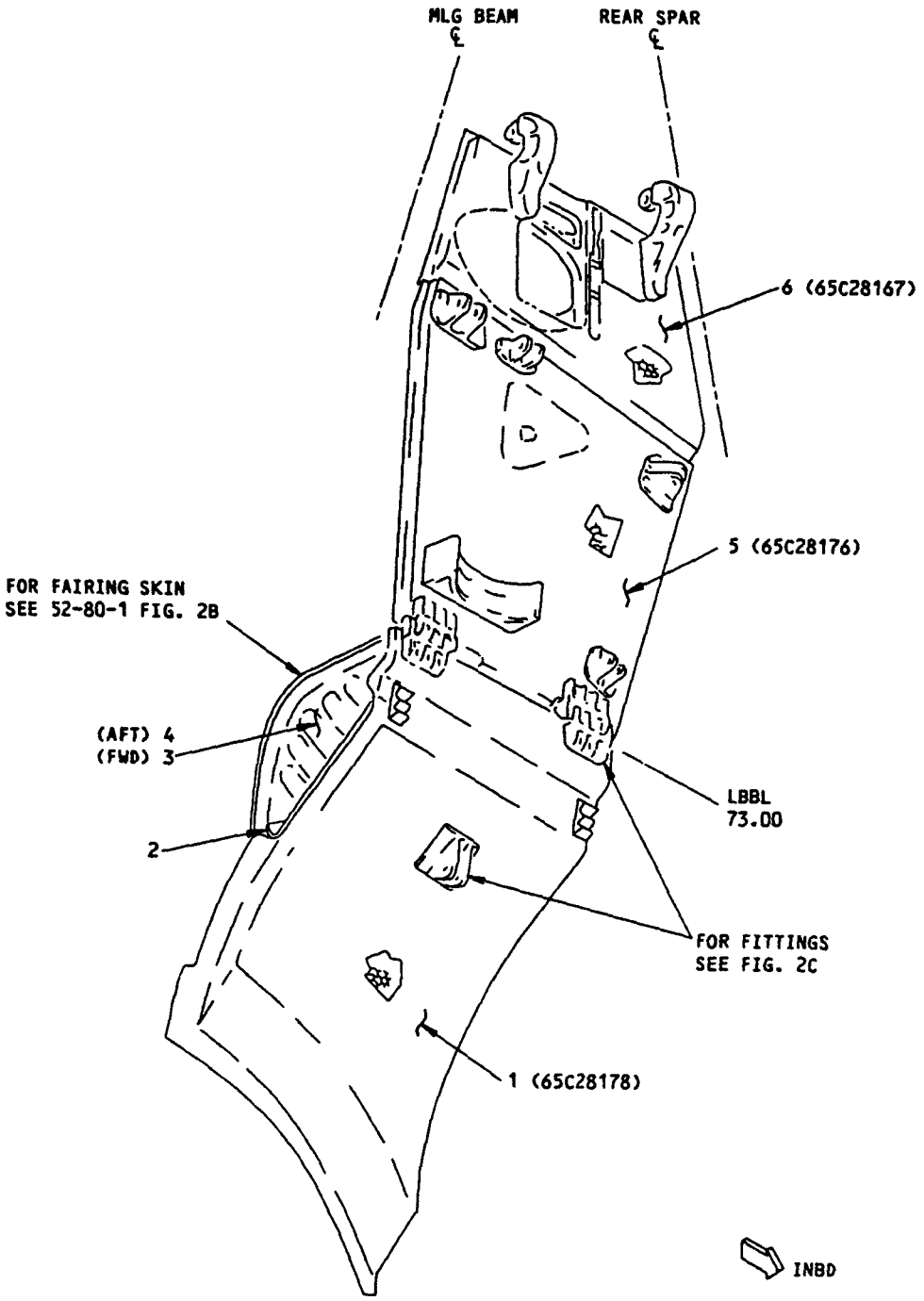

MLG DOORS SHOWN IN OPEN POSITION
DETAIL I

Main Landing Gear Door Structure Identification
(Graphite Composite MLG Doors)
Figure 2A (Sheet 2)

ITEM	DESCRIPTION	GAGE	MATERIAL	EFFECTIVITY
1	INNER MLG DOOR – BOND ASSY.		GLASS/GRAPHITE/EPOXY HONEYCOMB SANDWICH	
	SKIN		SEE DETAIL II	
	CORE		NON–METALLIC HONEYCOMB PER BMS 8–124, CLASS IV, TYPE V, GRADE 3.0	
2	SUPPORT ANGLE	0.100	CLAD 2024–T4	
3	SUPPORT PLATE – FAIRING	0.050	CLAD 2024–T3	
4	SUPPORT PLATE – FAIRING	0.063	CLAD 2024–T4	
5	CENTER MLG DOOR–BOND ASSY		GLASS/GRAPHITE/EPOXY HONEYCOMB SANDWICH	
	SKIN		SEE DETAIL III	
	CORE		NON–METALLIC HONEYCOMB PER BMS 8–124 CLASS IV, TYPE V, GRADE 3.0	
	CORE–FITTING SUPPORT		NON–METALLIC HONEYCOMB PER BMS 8–124, CLASS I, TYPE I, GRADE 12.0	
6	OUTER MLG DOOR–BOND ASSY		GLASS/GRAPHITE/EPOXY HONEYCOMB SANDWICH	
	SKIN		SEE DETAIL IV	
	CORE		NON–METALLIC HONEYCOMB PER BMS 8–124, CLASS IV, TYPE V, GRADE 3.0	
	CORE–FITTING SUPPORT		NON–METALLIC HONEYCOMB PER BMS 8–124 CLASS IV, TYPE V, GRADE 8.0	

LIST OF MATERIALS FOR DETAIL I

Main Landing Gear Door Structure Identification
(Graphite Composite MLG Doors)
Figure 2A (Sheet 3)

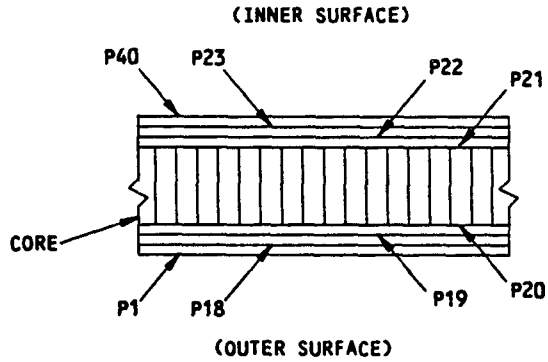

SECTION THRU HONEYCOMB DOOR

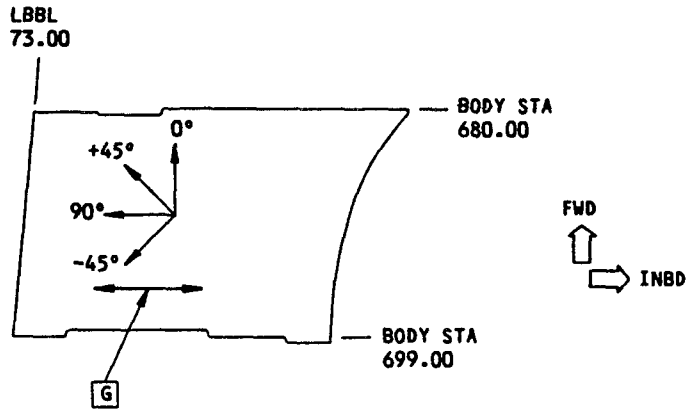

VIEW ON INNER MLG DOOR [A]

ITEM	PLY NO.	MATERIAL	PLY ORIENTATION
1	P1, P40	[C]	0° OR 90°
	P19,P22	[D]	90°
	P18,P20,P21,P23	[E]	0° OR 90°

PLY TABLE FOR INNER MLG DOOR [B]

DETAIL II

Main Landing Gear Door Structure Identification
(Graphite Composite MLG Doors)
Figure 2A (Sheet 4)

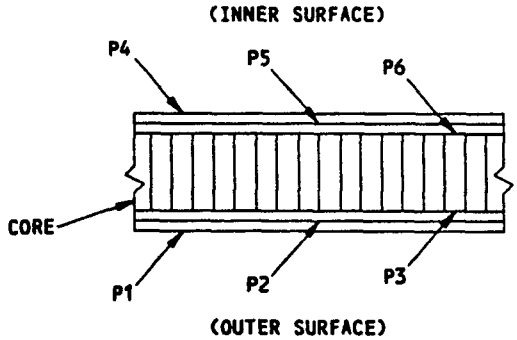

SECTION THRU HONEYCOMB DOOR

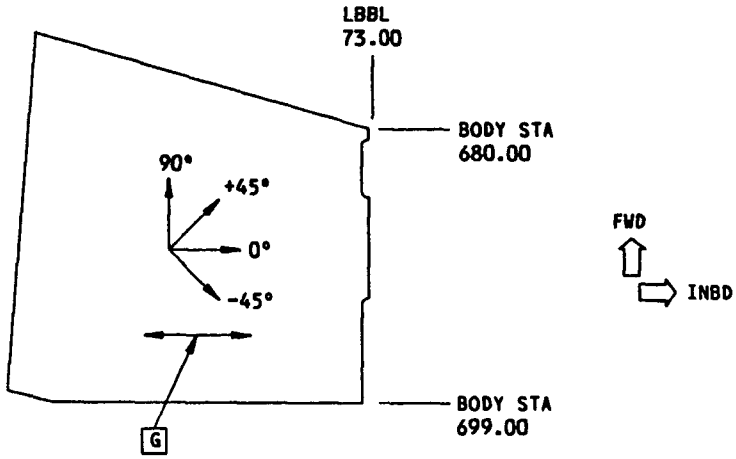

VIEW ON CENTER MLG DOOR [A]

ITEM	PLY NO.	MATERIAL	PLY ORIENTATION
5	P1,P6	[C]	0° OR 90°
	P2,P3,P4,P5	[E]	0° OR 90°

PLY TABLE FOR CENTER MLG DOOR [B]

DETAIL III

Main Landing Gear Door Structure Identification
(Graphite Composite MLG Doors)
Figure 2A (Sheet 5)

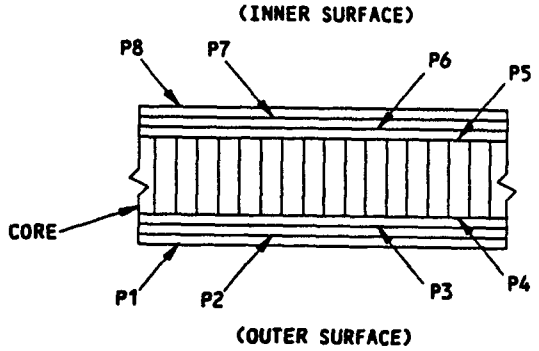

SECTION THRU HONEYCOMB DOOR

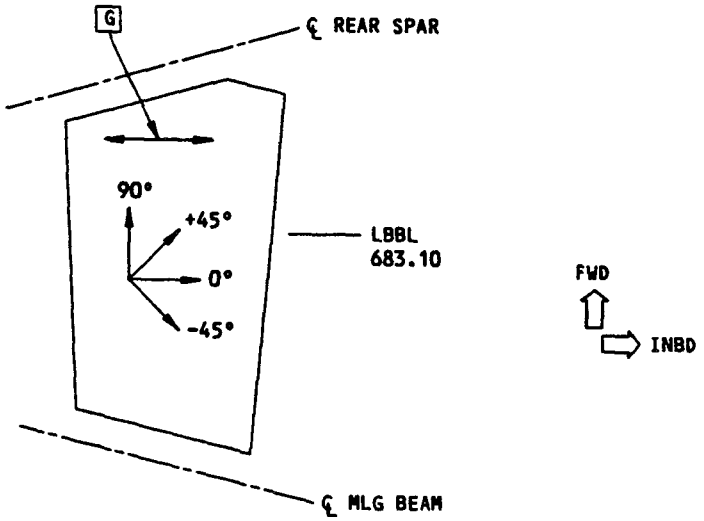

VIEW ON OUTER MLG DOOR [A]

ITEM	PLY NO.	MATERIAL	PLY ORIENTATION
6	P1,P4,P8	[C]	0° OR 90°
	P2,P7	[D]	0° OR 90°
	P3,P6	[D]	± 45°
	P5	[F]	0° OR 90°

PLY TABLE FOR OUTER MLG DOOR [B]

DETAIL IV

Main Landing Gear Door Structure Identification
(Graphite Composite MLG Doors)
Figure 2A (Sheet 6)

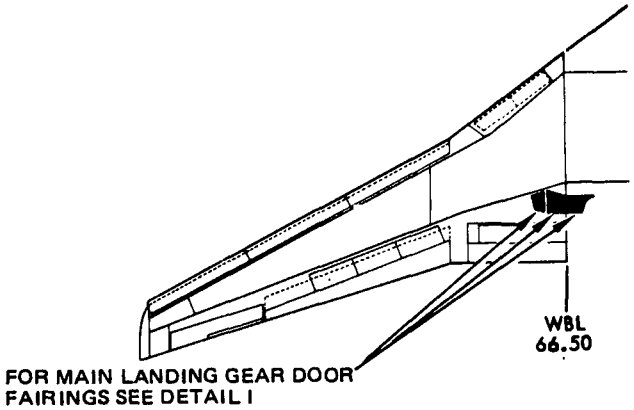

NOTES

- THIS FIGURE APPLIES TO 737-200 AIRPLANES WITH GRAPHITE COMPOSITE MLG DOORS, CUM LINE NUMBERS 1027, 1029, 1030, 1031, 1032, 1034, 1035 (BOEING REF: P4246-P4399, P4801-P5499, P8972-P9995)

[A] PLY ORIENTATION CONVENTION: THE PLY ORIENTATION OF EACH PLY IS DESIGNATED BY A NUMBER (IN DEGREES) REPRESENTING THE ORIENTATION OF THE AXIS PARALLEL TO THE DIRECTION OF FILAMENTS (IN TAPE) OR LONGITUDINALLY ORIENTED YARN (IN A WOVEN FABRIC) WITH RESPECT TO A REFERENCE AXIS. 0 DEGREES IS THE REFERENCE AXIS. THE DIRECTION OF LONGITUDINAL YARN IN A WOVEN FABRIC IS CALLED THE WARP DIRECTION

[B] MATERIAL AND PLY ORIENTATION ARE ALWAYS SHOWN FOR FIELD AREAS. SEE BOEING DRAWINGS FOR EDGE BANDS AND AREAS WITH DOUBLERS WHENEVER THEY ARE NOT SHOWN IN THE MANUAL AS ADJUNCTS TO FIELD AREAS

[C] PREPREG ARAMID FABRIC PER BMS 8-219, STYLE 285

[D] PREPREG GLASS FABRIC PER BMS 8-79, TYPE 120

[E] CORE RIBBON DIRECTION

Main Landing Gear Door Fairing Skin Identification
(Graphite Composite MLG Doors)
Figure 2B (Sheet 1)

REF DWG
65C27197

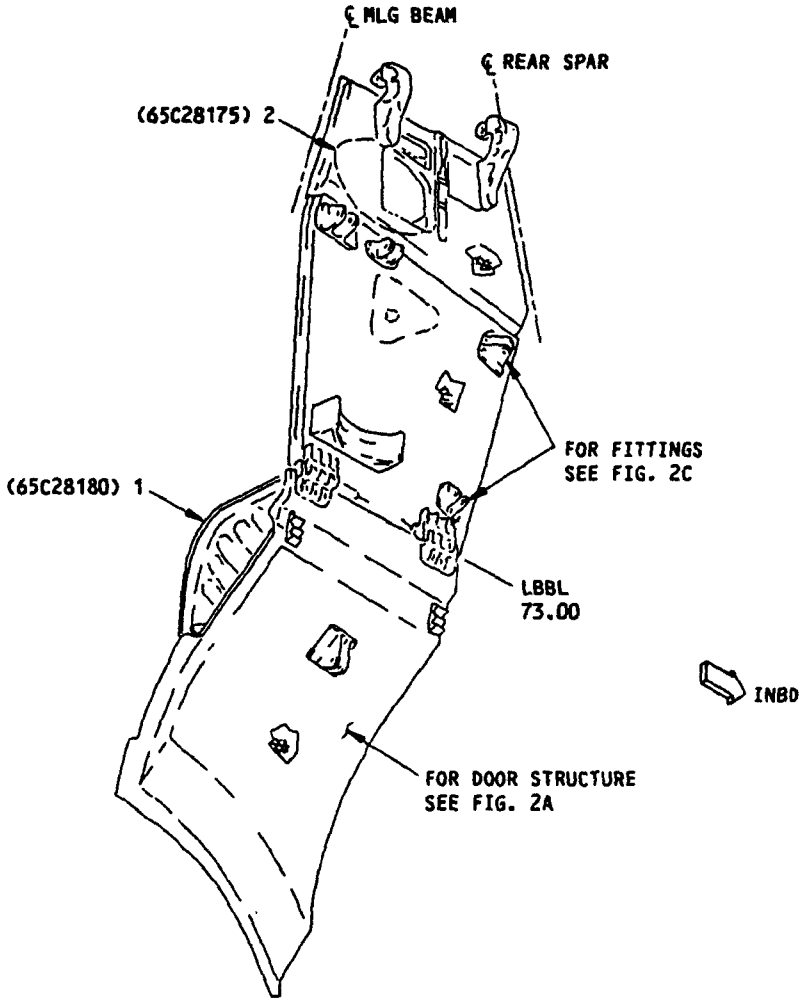

MAIN LANDING GEAR DOORS SHOWN IN OPEN POSITION
DETAIL I

Main Landing Gear Door Fairing Skin Identification
(Graphite Composite MLG Doors)
Figure 2B (Sheet 2)

ITEM	DESCRIPTION	GAGE	MATERIAL	EFFECTIVITY
1	FAIRING PANEL – BOND ASSY		GLASS/ARAMID/EPOXY HONEYCOMB SANDWICH	
	SKIN		SEE DETAIL II	
	CORE		NON–METALLIC HONEYCOMB PER BMS 8–124, CLASS IV, TYPE V, GRADE 3.0	
2	FAIRING PANEL		GLASS/ARAMID/EPOXY LAMINATE	
	SKIN		SEE DETAIL III	

LIST OF MATERIALS FOR DETAIL I

Main Landing Gear Door Fairing Skin Identification
(Graphite Composite MLG Doors)
Figure 2B (Sheet 3)

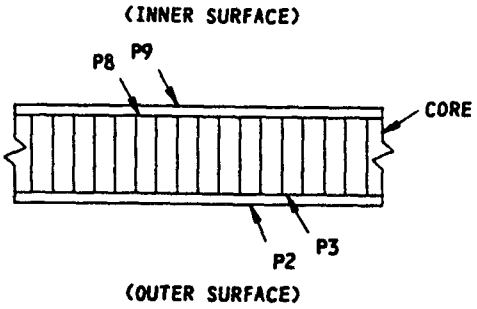

SECTION THRU HONEYCOMB PANEL

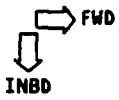

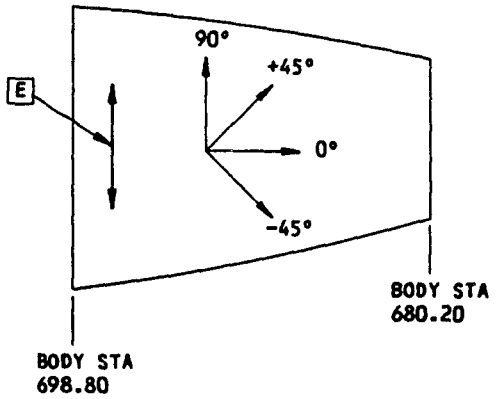

VIEW ON INNER MLG DOOR FAIRING [A]

ITEM	PLY NO.	MATERIAL	PLY ORIENTATION
1	P2,P3 P8,P9	[C]	0° OR 90°

PLY TABLE FOR INNER MLG DOOR FAIRING [B]

DETAIL II

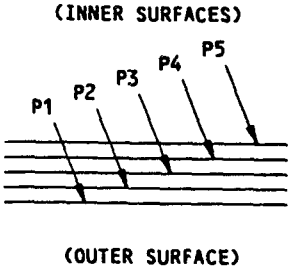

SECTION THRU LAMINATED FAIRING

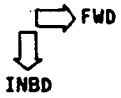

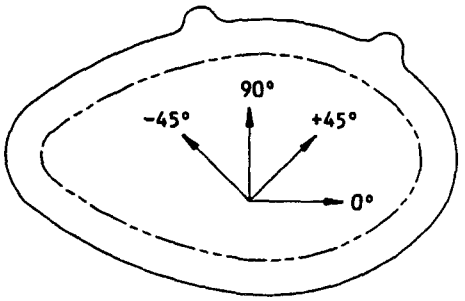

VIEW ON OUTER MLG DOOR FAIRING [A]

ITEM	PLY NO.	MATERIAL	PLY ORIENTATION
2	P1,P5	[D]	OPTIONAL
	P3	[C]	± 45°
	P2,P4	[C]	0° OR 90°

PLY TABLE FOR OUTER MLG DOOR FAIRING

DETAIL III

Main Landing Gear Door Fairing Skin Identification
(Graphite Composite MLG Doors)
Figure 2B (Sheet 4)

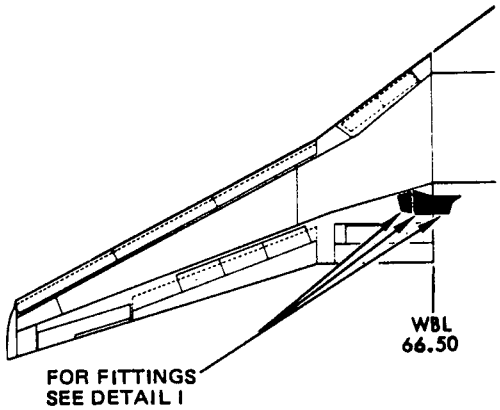

NOTE

- THIS FIGURE APPLIES TO 737-200 AIRPLANES WITH GRAPHITE COMPOSITE MLG DOORS, CUM LINE NUMBERS 1027, 1029, 1031, 1032, 1034, 1036, 1039 THRU 1042, 1044 THRU 1047, 1049, 1050, 1051, 1053, 1054 THRU 1056, 1058 THRU 1062, 1064 THRU 1068, 1070 THRU 1072, 1074, 1075, 1077 THRU 1079, 1081, 1082, 1084 THRU 1086, 1088, 1089, 1091, 1093, 1095, 1097, 1099, 1102, 1105, 1109, 1113, 1117, 1120, 1135, 1143, 1151, 1154, 1155, 1165, 1167, 1176, 1178, 1186, 1189, 1194, 1197, 1199, 1203, 1223, 1226, 1236, 1241, 1245, 1256, 1257, 1261, 1262, 1265, 1266, 1267, 1299, 1313, 1319, 1329, 1342, 1347, 1361, 1369, 1371, 1379, 1387, 1392, 1397, 1399, 1401, 1403, 1405, 1414, 1415, 1418, 1420, 1422, 1424, 1426, 1453, 1456, 1486 (BOEING REF: P4341 THRU P4399, P4801 THRU P5499, P8979 THRU P9995)

Main Landing Gear Door Fitting Identification
(Graphite Composite MLG Doors)
Figure 2C (Sheet 1)

REF DWG
65C27197

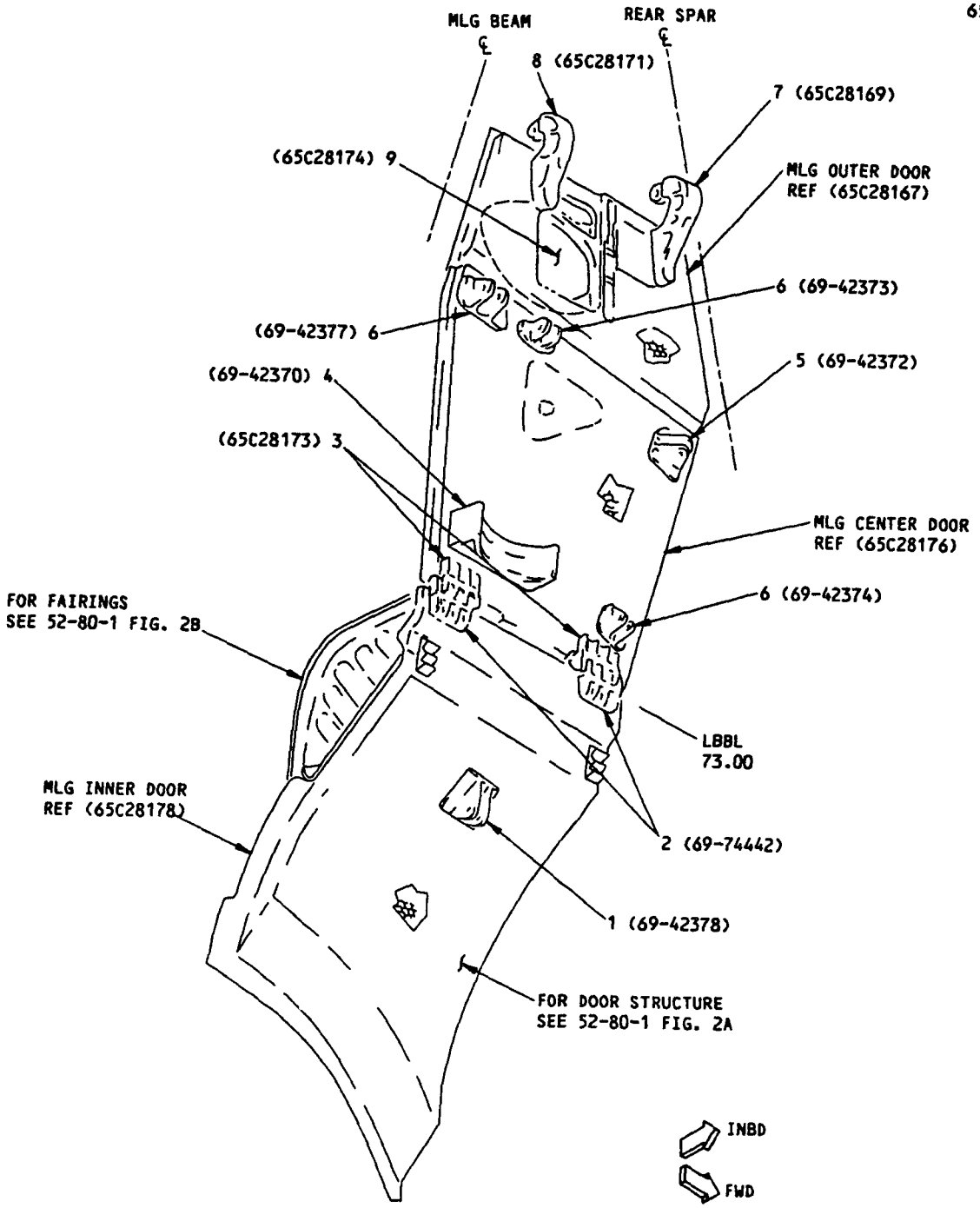

MAIN LANDING GEAR DOORS SHOWN IN OPEN POSITION
DETAIL I
Main Landing Gear Door Fitting Identification
(Graphite Composite MLG Doors)
Figure 2C (Sheet 2)

ITEM	DESCRIPTION	GAGE	MATERIAL	EFFECTIVITY
1	ACTUATOR FITTING	1.7	2024–T4	
2	HINGE FITTING	0.70	7075–T7351	
3	HINGE FITTING–FWD, AFT	1.0	7075–T7351	
4	CRADLE FITTING	2.0	2024–T4	
5	ATTACH FITTING	1.6	2024–T4	
6	ATTACH FITTING	1.1	2024–T4	
7	HINGE FITTING – FWD	1.5	FORGING 7075–T73 (OPTIONAL: 7075–T7351)	
8	HINGE FITTING – AFT	1.3	FORGING 7075–T73 (OPTIONAL: 7075–T7351)	
9	ACTUATOR FITTING	1.8	7075–T73	

LIST OF MATERIALS FOR DETAIL I

Main Landing Gear Door Fitting Identification
(Graphite Composite MLG Doors)
Figure 2C (Sheet 3)

ITEM	DESCRIPTION	GAGE	MATERIAL	REPAIR FIG. NO.
1	STIFFENER	0.050	CLAD 2024-T3 SHEET	
2	CHANNEL	0.063	CLAD 7075-0 HT T6 SHEET	
3	SEAL RETAINER	0.050	CLAD 2024-T3 SHEET	
4	SEAL SUPPORT	0.050	CLAD 2024-0 SHEET HT T42	
5	ATTACH ANGLE	0.050	CLAD 2024-0 SHEET HT T42	
6	FILLER	0.050	CLAD 2024-T3 SHEET	
7	GUSSET	0.063	CLAD 2024-0 SHEET HT T42	
8	FILLET FAIRING		LAMINATE OF PHILIPINE MAHOGANY OR EQUIVALENT	

Gravel Deflector - Fairing and Nose Gear Door - Material Identification
Figure 3 (Sheet 1)

REF DWG
65-76629

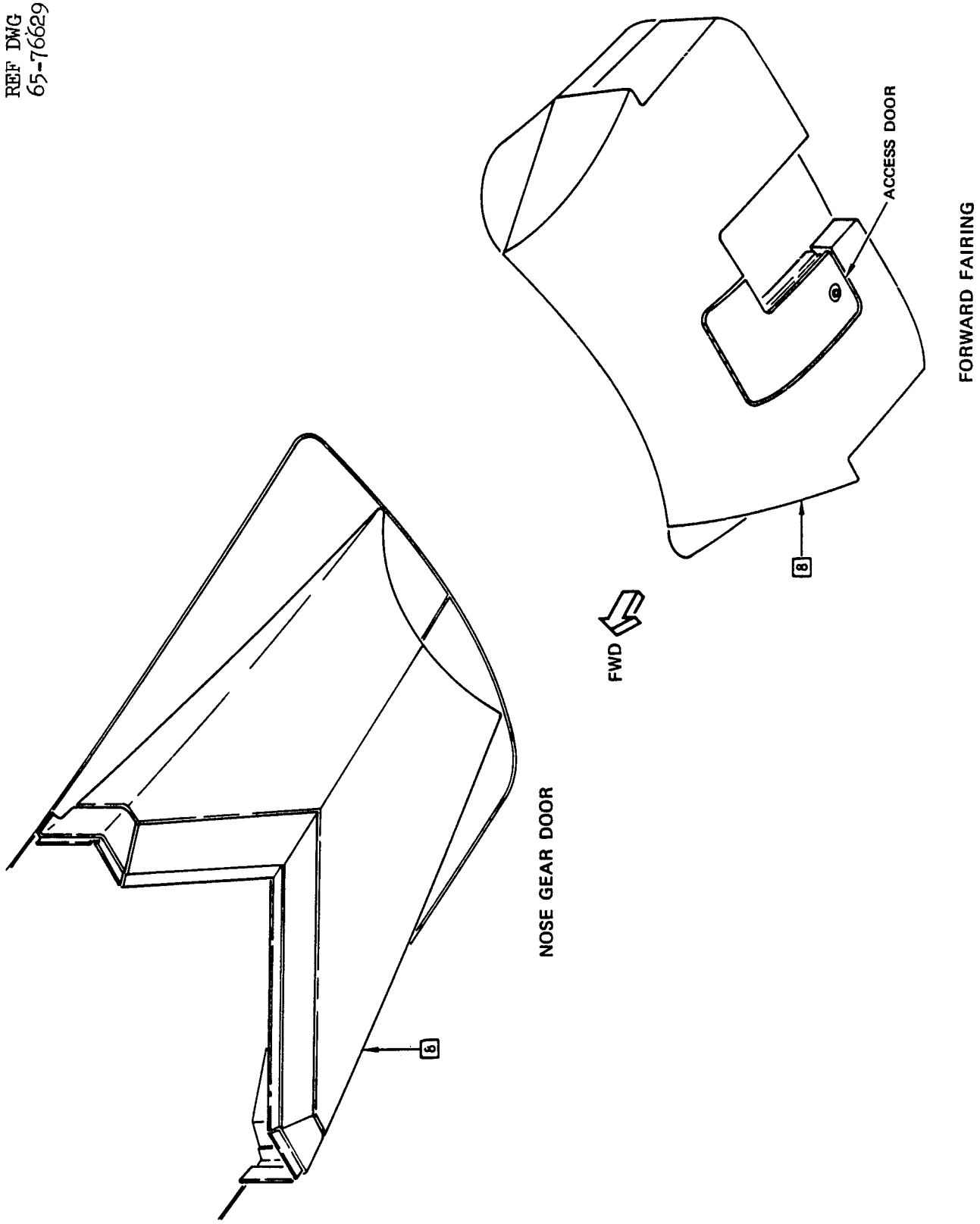

Gravel Deflector - Fairing and Nose Gear Door - Material Identification
Figure 3 (Sheet 2)

NOTES

[A] FOR AIRPLANES WITH STANDARD TIRES

[B] FOR AIRPLANES WITH LOW PRESSURE TIRES

REF DWG
65-76633
65-76631
65-76643

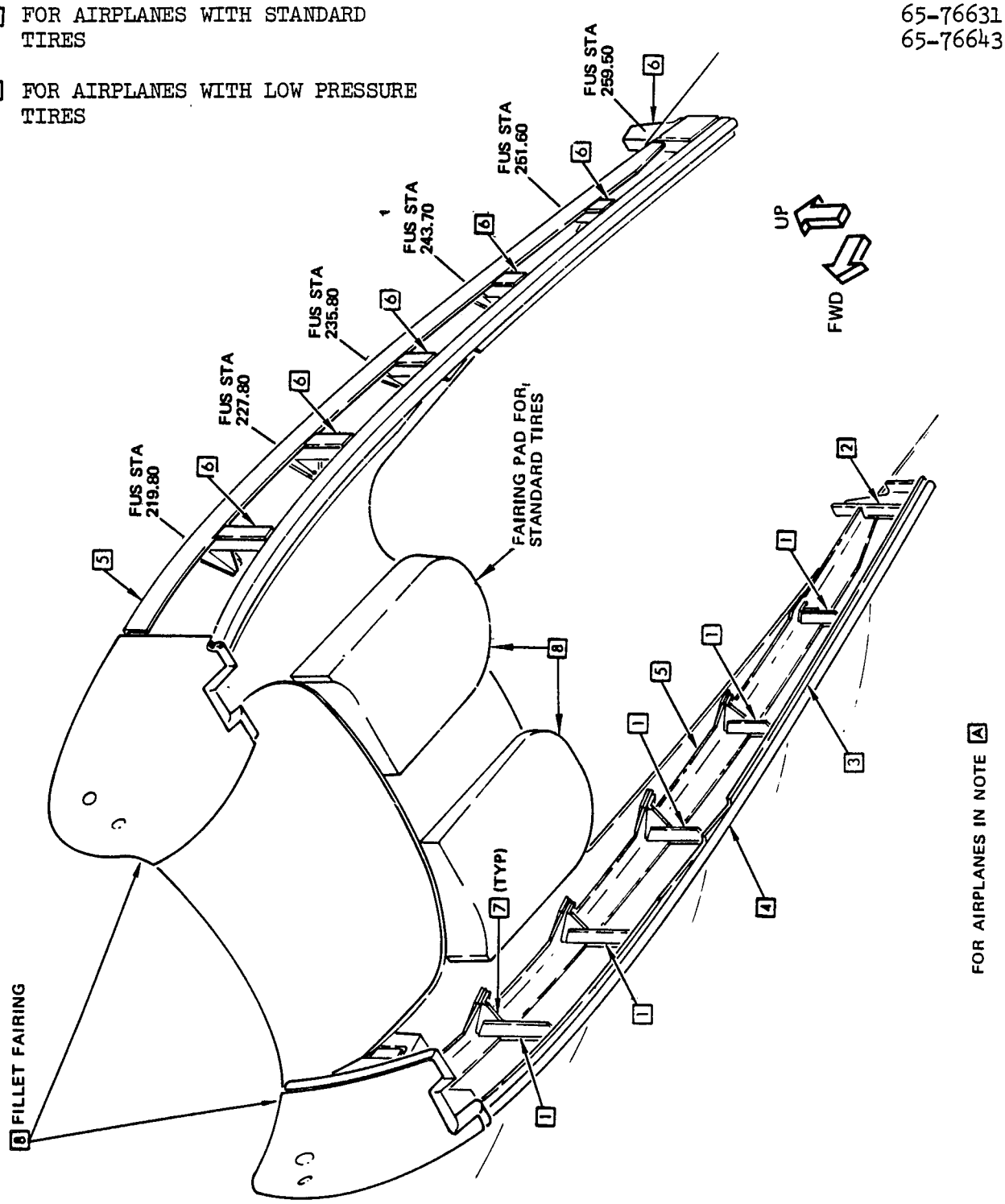

Gravel Deflector Fairing and Nose Gear Door - Material Identification
Figure 3 (Sheet 3)

REF DWG
65-76633
65-76631
65-76643

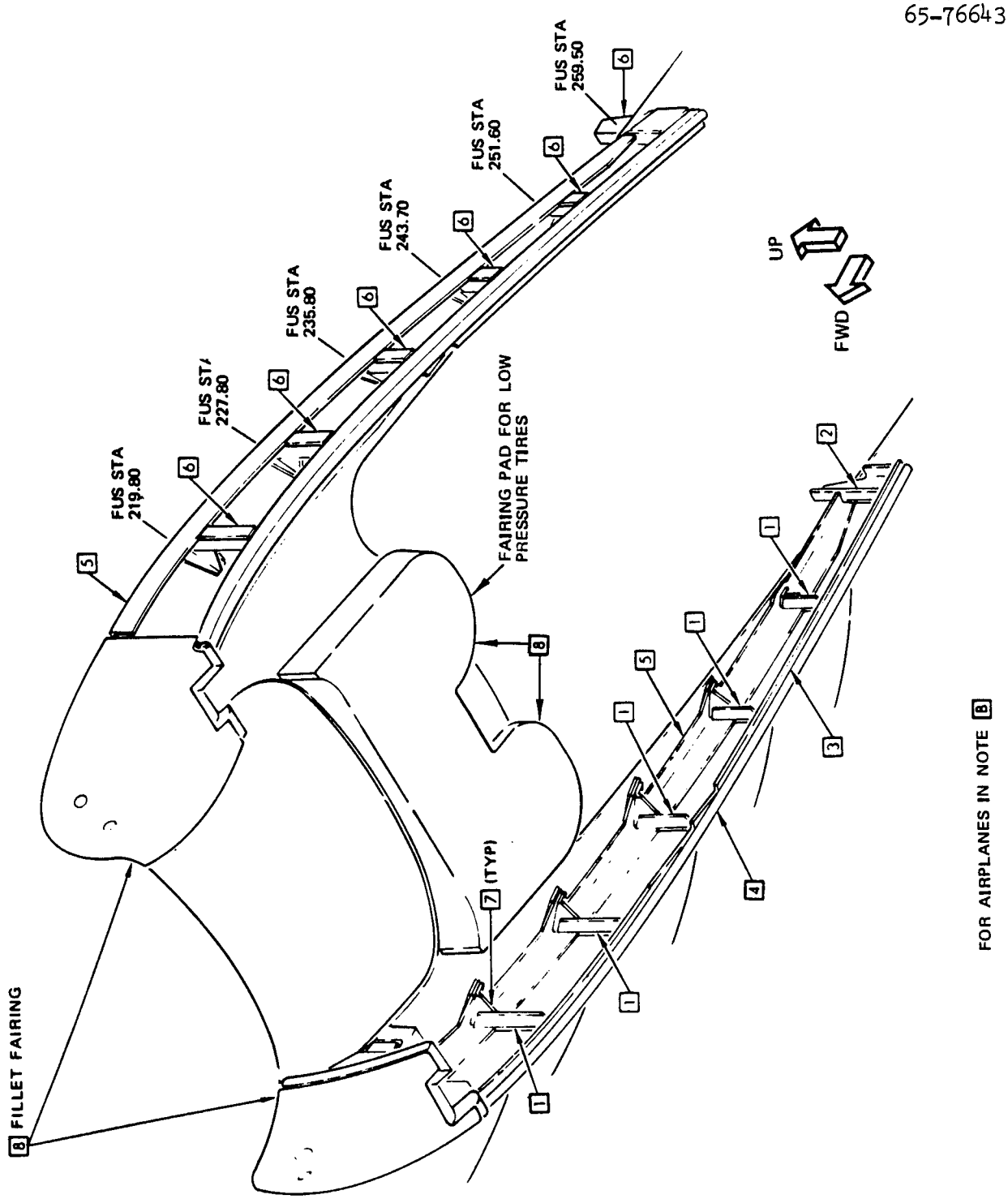

Gravel Deflector Fairing and Nose Gear Door - Material Identification
Figure 3 (Sheet 4)

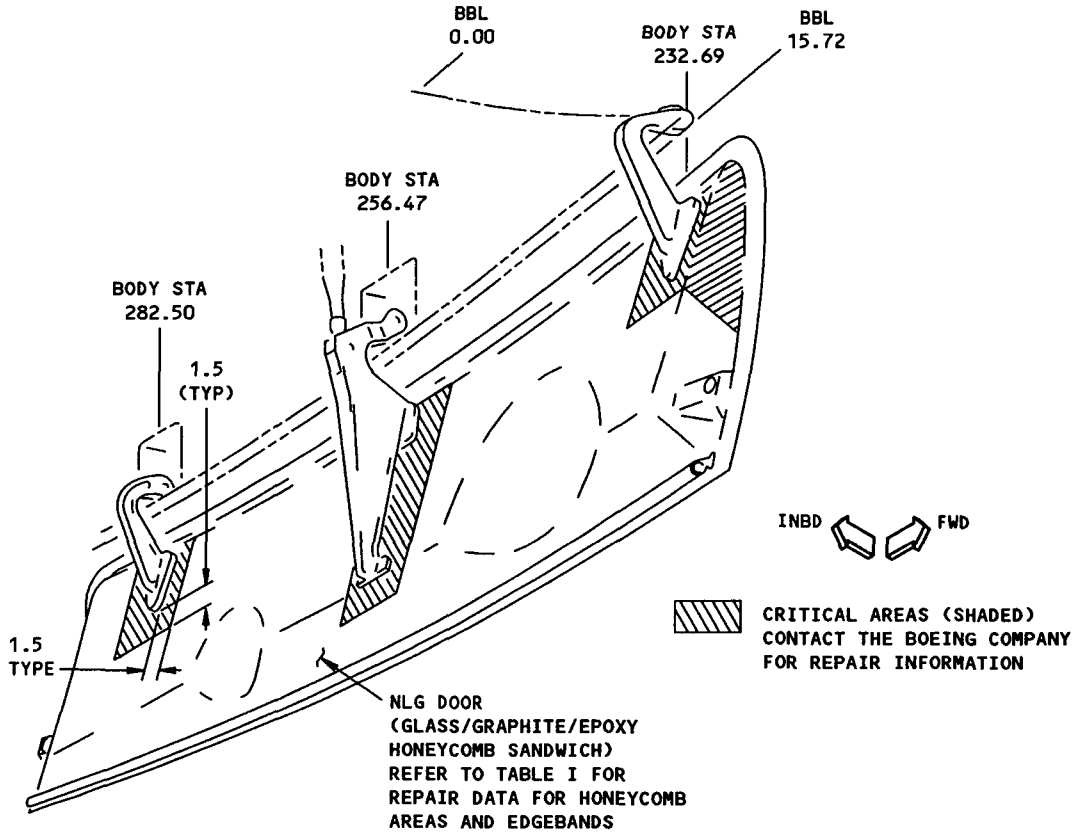

NOTES

- THIS REPAIR WILL NOT HAVE AN EFFECT ON A STRUCTURALLY SIGNIFICANT ITEM (SSI) GIVEN IN SRM 51-00-4, FIG. 3. THUS, NO CHANGE TO THE SUPPLEMENTAL STRUCTURAL INSPECTION DOCUMENT (SSID) INSPECTION PROGRAM IS NECESSARY.
- REFINISH REWORKED AREAS AS GIVEN IN AMM 51-20.
- REFER TO SRM 51-70 FOR AERODYNAMIC SMOOTHNESS REQUIREMENTS. WHERE THE DAMAGE EXCEEDS THE LIMITS SHOWN IN SRM 51-70, CONSIDERATION SHOULD BE GIVEN TO THE LOSS OF PERFORMANCE INVOLVED.
- WHERE NO REPAIR IS SPECIFIED, USE THE REPAIR INDEX IN THE APPROPRIATE REPAIR SECTION OF SRM 51-40 TO DETERMINE THE REPAIR TO BE USED.
- REFER TO SRM 51-10 FOR INVESTIGATION AND CLEANUP OF DAMAGE.

[A] LIMITED TO REPAIR OF DAMAGE TO ONE FACESHEET SKIN AND HONEYCOMB CORE. ONE REPAIR PER SQUARE FOOT OF AREA AND MINIMUM OF 6.0 INCHES (EDGE TO EDGE) FROM ANY OTHER DAMAGE (ON EITHER SURFACE OF PANEL), FASTENER HOLE, OR EDGE OF PANEL.

[B] DO AN INSPECTION ON THE INTERIM REPAIR USING NDI PROCEDURES AS GIVEN IN SRM 51-40-12 AT EACH AIRPLANE "2A" CHECK. PERMANENT REPAIR IS REQUIRED IF DETERIORATION IS EVIDENT. THESE REPAIRS HAVE FAA APPROVAL CONTINGENT ON ACCOMPLISHMENT OF THE INSPECTIONS AT THE REQUIRED INTERVALS.

[C] ONE REPAIR PER SQUARE FOOT OF AREA AND A MINIMUM OF 6.0 INCHES (EDGE TO EDGE) FROM ANY OTHER DAMAGE (ON EITHER SURFACE OF PANEL), FASTENER HOLE, OR EDGE OF PANEL.

Nose Landing Gear Door Structure Repair (Graphite Composite NLG Doors)
Figure 1 (Sheet 1)

BOEING PROPRIETARY - Copyright © - Unpublished Work - See title page for details.

DAMAGE	INTERIM REPAIRS [B]	PERMANENT REPAIRS		
	WET LAYUP ROOM TEMP (51-40-12)	WET LAYUP 150°F CURE (51-40-12)	WET LAYUP 200°F CURE (51-40-15)	250°F CURE (51-40-13)
HOLES	2.0 MAX DIA NOT TO EXCEED 30% OF SMALLEST DIMENSION ACROSS HONEYCOMB PANEL AT THE DAMAGE LOCATION. REPAIR PER 51-40-12, REPAIR 14. [A]	5.0 MAX DIA NOT TO EXCEED 50% OF SMALLEST DIMENSION ACROSS HONEYCOMB PANEL AT THE DAMAGE LOCATION. USE TWO EXTRA PLIES PER FACESHEET REPAIRED [C]	5.0 MAX DIA NOT TO EXCEED 50% OF SMALLEST DIMENSION ACROSS HONEYCOMB PANEL AT THE DAMAGE LOCATION. USE TWO EXTRA PLIES PER FACESHEET REPAIRED [C]	NO SIZE LIMIT
CRACKS	UP TO 5.0 INCHES LONG, REPAIR PER 51-40-12, REPAIR 14. [A]	USE SAME LIMITS AND REQUIREMENTS AS FOR HOLES.		
DELAMI-NATION	USE SAME LIMITS AS FOR HOLES AND REPAIR PER 51-40-12, REPAIR 14. [A]	USE SAME LIMITS AND REQUIREMENTS AS FOR HOLES.		
NICKS AND GOUGES	IF FIBER DAMAGE OR DELAMINATION EXISTS, USE SAME LIMITS AS FOR HOLES AND REPAIR PER 51-40-12, REPAIR 14. [A]	IF THERE IS NO FIBER DAMAGE OR DELAMINATION, FILL NICKS OR GOUGES PER 51-40-12. IF FIBER DAMAGE OR DELAMINATION EXISTS, USE SAME LIMITS AND REQUIREMENTS AS FOR HOLES.		
DENTS	USE SAME LIMITS AS FOR HOLES AND REPAIR PER 51-40-12, REPAIR 14. [A]	USE SAME LIMITS AND REQUIREMENTS AS FOR HOLES.		

REPAIR DATA FOR 250°F CURE HONEYCOMB PANELS

TABLE I

Nose Landing Gear Door Structure Repair (Graphite Composite NLG Doors)
Figure 1 (Sheet 2)

136883

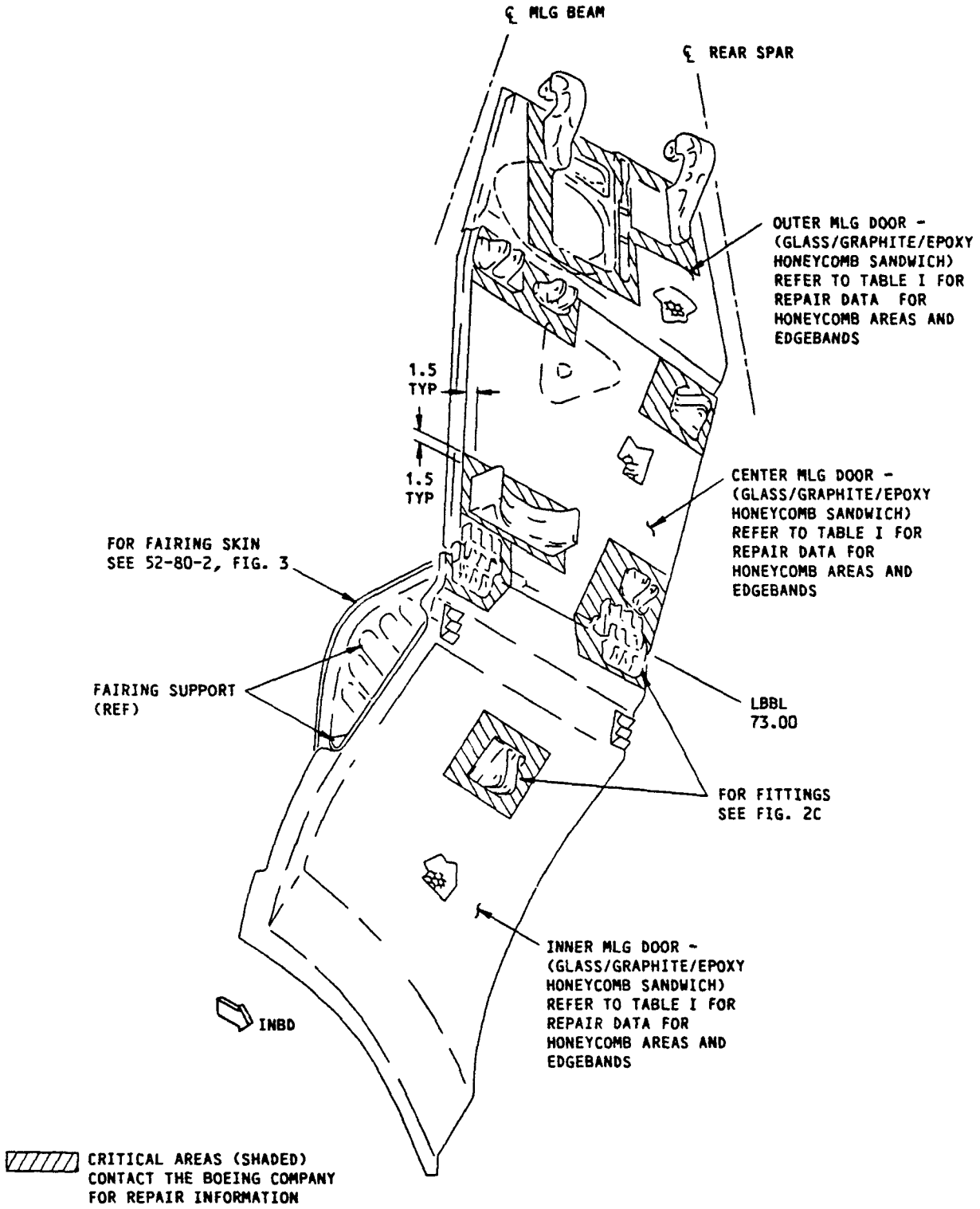

Main Landing Gear Door Structure Repairs (Graphite Composite MLG Doors)
Figure 2 (Sheet 1)

136846

DAMAGE	INTERIM REPAIRS [B]	PERMANENT REPAIRS		
	WET LAYUP ROOM TEMP (51-40-12)	WET LAYUP 150°F CURE (51-40-12)	WET LAYUP 200°F CURE (51-40-15)	250°F CURE (51-40-13)
HOLES	2.0 MAX DIA NOT TO EXCEED 30% OF SMALLEST DIMENSION ACROSS HONEYCOMB PANEL AT THE DAMAGE LOCATION. REPAIR AS GIVEN IN SRM 51-40-12, REPAIR 14. [A]	5.0 MAX DIA NOT TO EXCEED 50% OF SMALLEST DIMENSION ACROSS HONEYCOMB PANEL AT THE DAMAGE LOCATION. USE TWO EXTRA PLIES AS GIVEN IN FACESHEET REPAIRED. [C]	5.0 MAX DIA NOT TO EXCEED 50% OF SMALLEST DIMENSION ACROSS HONEYCOMB PANEL AT THE DAMAGE LOCATION. USE TWO EXTRA PLIES AS GIVEN IN FACESHEET REPAIRED. [C]	NO SIZE LIMIT
CRACKS	UP TO 5.0 INCHES LONG, REPAIR AS GIVEN IN SRM 51-40-12, REPAIR 14. [A]	USE SAME LIMITS AND REQUIREMENTS AS FOR HOLES.		
DELAMI-NATION	USE SAME LIMITS AS FOR HOLES AND REPAIR AS GIVEN IN SRM 51-40-12, REPAIR 14. [A]	USE SAME LIMITS AND REQUIREMENTS AS FOR HOLES.		
NICKS AND GOUGES	IF FIBER DAMAGE OR DELAMINATION EXISTS, USE SAME LIMITS AS FOR HOLES AND REPAIR AS GIVEN IN SRM 51-40-12, REPAIR 14. [A]	IF THERE IS NO FIBER DAMAGE OR DELAMINATION, FILL NICKS OR GOUGES AS GIVEN IN SRM 51-40-12. IF FIBER DAMAGE OR DELAMINATION EXISTS, USE SAME LIMITS AND REQUIREMENTS AS FOR HOLES.		
DENTS	USE SAME LIMITS AS FOR HOLES AND REPAIR AS GIVEN IN SRM 51-40-12, REPAIR 14. [A]	USE SAME LIMITS AND REQUIREMENTS AS FOR HOLES.		

REPAIR DATA FOR 250°F CURE HONEYCOMB PANELS

TABLE I

NOTES

- THIS REPAIR WILL NOT HAVE AN EFFECT ON A STRUCTURALLY SIGNIFICANT ITEM (SSI) GIVEN IN SRM 51-00-4, FIG. 3. THUS, NO CHANGE TO THE SUPPLEMENTAL STRUCTURAL INSPECTION DOCUMENT (SSID) INSPECTION PROGRAM IS NECESSARY.
- REFINISH REWORKED AREAS AS GIVEN IN AMM 51-20.
- REFER TO SRM 51-70 FOR AERODYNAMIC SMOOTHNESS REQUIREMENTS. WHERE THE DAMAGE EXCEEDS THE LIMITS SHOWN IN SRM 51-70, CONSIDERATION SHOULD BE GIVEN TO THE LOSS OF PERFORMANCE INVOLVED.
- WHERE NO REPAIR IS SPECIFIED, USE THE REPAIR INDEX IN THE APPROPRIATE REPAIR SECTION OF SRM 51-40 TO DETERMINE THE REPAIR TO BE USED.
- REFER TO SRM 51-10 FOR INVESTIGATION AND CLEANUP OF DAMAGE.

[A] LIMITED TO REPAIR OF DAMAGE TO ONE FACE-SHEET SKIN AND HONEYCOMB CORE. ONE REPAIR PER SQUARE FOOT OF AREA AND MINIMUM OF 6.0 INCHES (EDGE TO EDGE) FROM ANY OTHER DAMAGE (ON EITHER SURFACE OF PANEL), FASTENER HOLE, OR EDGE OF PANEL.

[B] DO AN INSPECTION OF THE INTERIM REPAIR USING NDI PROCEDURES AS GIVEN IN SRM 51-40-12 AT EACH AIRPLANE "2A" CHECK. PERMANENT REPAIR IS REQUIRED IF DETERIORATION IS EVIDENT. THESE REPAIRS HAVE FAA APPROVAL CONTINGENT ON ACCOMPLISHMENT OF THE INSPECTIONS AT THE REQUIRED INTERVALS.

[C] ONE REPAIR PER SQUARE FOOT OF AREA AND A MINIMUM OF 6.0 INCHES (EDGE TO EDGE) FROM ANY OTHER DAMAGE (ON EITHER SURFACE OF PANEL), FASTENER HOLE, OR EDGE OF PANEL.

Main Landing Gear Door Structure Repairs (Graphite Composite MLG Doors)
Figure 2 (Sheet 2)

BOEING PROPRIETARY - Copyright © - Unpublished Work - See title page for details.

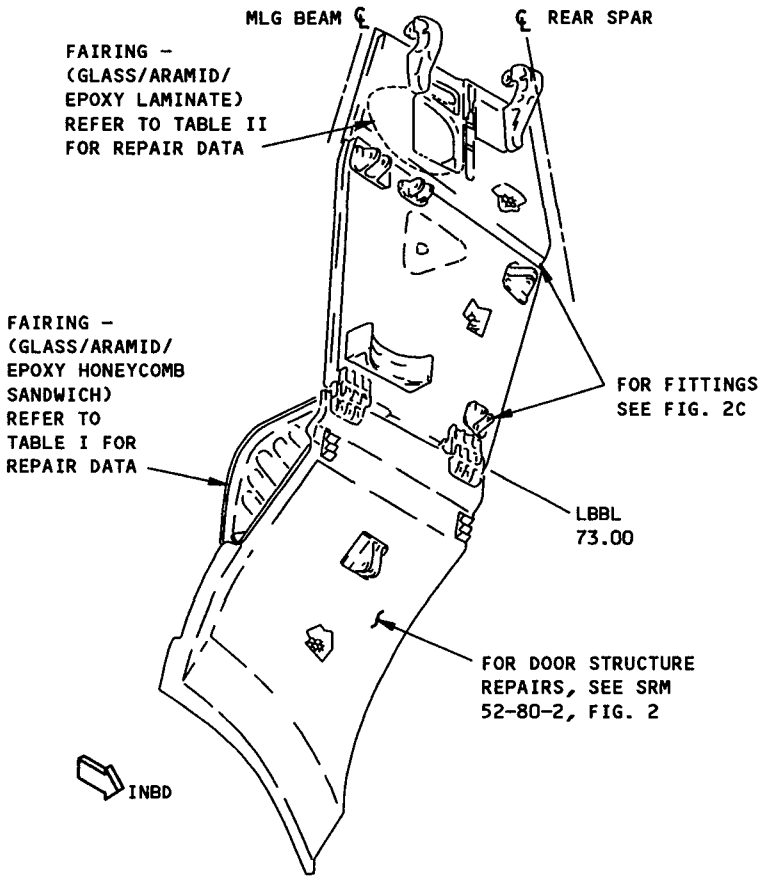

MAIN LANDING GEAR DOORS SHOWN IN OPEN POSITION

NOTES

- THIS REPAIR WILL NOT HAVE AN EFFECT ON A STRUCTURALLY SIGNIFICANT ITEM (SSI) GIVEN IN SRM 51-00-4, FIG. 3. THUS, NO CHANGE TO THE SUPPLEMENTAL STRUCTURAL INSPECTION DOCUMENT (SSID) INSPECTION PROGRAM IS NECESSARY.
- REFINISH REWORKED AREAS AS GIVEN IN AMM 51-20.
- REFER TO SRM 51-70 FOR AERODYNAMIC SMOOTHNESS REQUIREMENTS. WHERE THE DAMAGE EXCEEDS THE LIMITS SHOWN IN SRM 51-70, CONSIDERATION SHOULD BE GIVEN TO THE LOSS OF PERFORMANCE INVOLVED.
- WHERE NO REPAIR IS SPECIFIED, USE THE REPAIR INDEX IN THE APPROPRIATE REPAIR SECTION OF SRM 51-40 TO FIND THE REPAIR TO BE USED.
- REFER TO SRM 51-10 FOR INVESTIGATION AND CLEANUP OF DAMAGE.

[A] LIMITED TO REPAIR OF DAMAGE TO ONE FACE-SHEET SKIN AND HONEYCOMB CORE. ONE REPAIR PER SQUARE FOOT OF AREA AND MINIMUM OF 6.0 INCHES (EDGE TO EDGE) FROM ANY OTHER DAMAGE (ON EITHER SURFACE OF PANEL), FASTENER HOLE, OR EDGE OF PANEL.

[B] INSPECT INTERIM REPAIR USING NDI PROCEDURES AS GIVEN IN SRM 51-40-12 AT EACH AIRPLANE "2A" CHECK. PERMANENT REPAIR IS REQUIRED IF ANY DETERIORATION IS EVIDENT. THESE REPAIRS HAVE FAA APPROVAL CONTINGENT ON ACCOMPLISHMENT OF THE INSPECTIONS AT THE REQUIRED INTERVALS.

[C] ONE REPAIR PER SQUARE FOOT OF AREA AND A MINIMUM OF 6.0 INCHES (EDGE TO EDGE) FROM ANY OTHER DAMAGE (ON EITHER SURFACE OF PANEL), FASTENER HOLE, OR EDGE OF PANEL.

[D] ONE REPAIR PER SQUARE FOOT OF AREA AND A MINIMUM OF 3.0 INCHES (EDGE TO EDGE) FROM ANY OTHER DAMAGE (ON EITHER SURFACE OF PANEL), FASTENER HOLE, OR EDGE OF PANEL.

Main Landing Gear Door Fairing Skin Repair (Graphite Composite MLG Doors)
Figure 3 (Sheet 1)

BOEING PROPRIETARY - Copyright © - Unpublished Work - See title page for details.

DAMAGE	INTERIM REPAIRS [B]	PERMANENT REPAIRS		
	WET LAYUP ROOM TEMP (51-40-12)	WET LAYUP 150°F CURE (51-40-12)	WET LAYUP 200°F CURE (51-40-15)	250°F CURE (51-40-13)
HOLES	2.0 MAX DIA NOT TO EXCEED 30% OF SMALLEST DIMENSION ACROSS HONEYCOMB PANEL AT THE DAMAGE LOCATION. REPAIR PER 51-40-12, REPAIR 14. [A]	5.0 MAX DIA NOT TO EXCEED 50% OF SMALLEST DIMENSION ACROSS HONEYCOMB PANEL AT THE DAMAGE LOCATION. USE TWO EXTRA PLIES PER FACESHEET REPAIRED [C]	5.0 MAX DIA NOT TO EXCEED 50% OF SMALLEST DIMENSION ACROSS HONEYCOMB PANEL AT THE DAMAGE LOCATION. USE TWO EXTRA PLIES PER FACESHEET REPAIRED [C]	NO SIZE LIMIT
CRACKS	UP TO 5.0 INCHES LONG, REPAIR PER 51-40-12, REPAIR 14. [A]	USE SAME LIMITS AND REQUIREMENTS AS FOR HOLES.		
DELAMI-NATION	USE SAME LIMITS AS FOR HOLES AND REPAIR PER 51-40-12, REPAIR 14. [A]	USE SAME LIMITS AND REQUIREMENTS AS FOR HOLES.		
NICKS AND GOUGES	IF FIBER DAMAGE OR DELAMINATION EXISTS, USE SAME LIMITS AS FOR HOLES AND REPAIR PER 51-40-12, REPAIR 14. [A]	IF THERE IS NO FIBER DAMAGE OR DELAMINATION, FILL NICKS OR GOUGES PER 51-40-12. IF FIBER DAMAGE OR DELAMINATION EXISTS, USE SAME LIMITS AND REQUIREMENTS AS FOR HOLES.		
DENTS	USE SAME LIMITS AS FOR HOLES AND REPAIR PER 51-40-12, REPAIR 14. [A]	USE SAME LIMITS AND REQUIREMENTS AS FOR HOLES.		

REPAIR DATA FOR 250°F CURE HONEYCOMB PANELS

TABLE I

Main Landing Gear Door Fairing Skin Repairs (Graphite Composite MLG Doors)
Figure 3 (Sheet 2)

136884

DAMAGE	INTERIM REPAIRS [B]	PERMANENT REPAIRS		
	WET LAYUP ROOM TEMP (51-40-12)	WET LAYUP 150°F CURE (51-40-12)	WET LAYUP 200°F CURE (51-40-15)	250°F CURE (51-40-13)
HOLES	2.0 MAX DIA NOT TO EXCEED 30% OF SMALLEST DIMENSION ACROSS LAMINATE PANEL AT THE DAMAGE LOCATION. REPAIR PER 51-40-12, REPAIR 14. [D]	5.0 MAX DIA NOT TO EXCEED 50% OF SMALLEST DIMENSION ACROSS LAMINATE PANEL AT THE DAMAGE LOCATION. USE TWO EXTRA PLIES PER SIDE [D]	5.0 MAX DIA NOT TO EXCEED 50% OF SMALLEST DIMENSION ACROSS LAMINATE PANEL AT THE DAMAGE LOCATION. USE TWO EXTRA PLIES PER SIDE	NO SIZE LIMIT
CRACKS	UP TO 5.0 INCHES LONG, REPAIR PER 51-40-12, REPAIR 14. [D]	USE SAME LIMITS AND REQUIREMENTS AS FOR HOLES.		
DELAMI-NATION	USE SAME LIMITS AS FOR HOLES AND REPAIR PER 51-40-12, REPAIR 14. [D]	USE SAME LIMITS AND REQUIREMENTS AS FOR HOLES.		
NICKS AND GOUGES	IF FIBER DAMAGE OR DELAMINATION EXISTS, USE SAME LIMITS AS FOR HOLES AND REPAIR PER 51-40-12, REPAIR 14. [D]	IF THERE IS NO FIBER DAMAGE OR DELAMINATION, FILL NICKS OR GOUGES PER 51-40-12. IF FIBER DAMAGE OR DELAMINATION EXISTS, USE SAME LIMITS AND REQUIREMENTS AS FOR HOLES.		
DENTS	USE SAME LIMITS AS FOR HOLES AND REPAIR PER 51-40-12, REPAIR 14. [D]	UP TO 2.0 IN. DIA WITH NO FIBER DAMAGE OR DELAMINATION, REPAIR PER 51-40-12, REPAIR 12. [D] IF OVER 2.0 IN. DIA OR WITH FIBER DAMAGE OR DELAMINATION, USE SAME LIMITS AND REQUIREMENTS AS FOR HOLES.		

REPAIR DATA FOR 250°F CURE LAMINATES

TABLE II

Main Landing Gear Door Fairing Skin Repairs (Graphite Composite MLG Doors)
Figure 3 (Sheet 3)

136888